Repair Manual

Golf Variant 2007 ➤
Golf Variant 2010 ➤
Jetta 2005 ➤
Jetta 2011 ➤

6-Speed Dual Clutch Transmission 02E									
Engine ID	BRM	BPY	CBF A	CCT A	CBE A	CJAA	CPLA	CPP A	

Edition 09.2015

Protected by copyright. Copying for private or commercial purposes, in part or in whole, is not permitted unless authorised by Volkswagen AG. Volkswagen AG does not guarantee or accept any liability with respect to the correctness of information in this document. Copyright by Volkswagen AG.

List of Workshop Manual Repair Groups

Repair Group

00 - General, Technical Data
30 - Clutch
34 - Controls, Housing
35 - Gears, Shafts
39 - Final Drive, Differential

Protected by copyright. Copying for private or commercial purposes, in part or in whole, is not permitted unless authorised by Volkswagen AG. Volkswagen AG does not guarantee or accept any liability with respect to the correctness of information in this document. Copyright by Volkswagen AG.

Technical information should always be available to the foremen and mechanics, because their careful and constant adherence to the instructions is essential to ensure vehicle road-worthiness and safety. In addition, the normal basic safety precautions for working on motor vehicles must, as a matter of course, be observed.

All rights reserved.
No reproduction without prior agreement from publisher.

Copyright © 2016 Volkswagen AG, Wolfsburg

D3E80020F58

Contents

00 - General, Technical Data 1
- **1 General Repair Information** 1
- 1.1 Tools 1
- 1.2 Transmission 1
- 1.3 Brief Overview - Guide 2
- 1.4 O-Rings, Gaskets and Seals 3
- 1.5 DSG® Transmission Fluid 3
- 1.6 Bolts and Nuts 5
- 1.7 Electrical Components 5
- **2 Troubleshooting** 6
- 2.1 Troubleshooting, General Information 6
- 2.2 Transmission "Control Module Malfunction Behavior" Information 6
- 2.3 Fault Finding, Special Information 7
- **3 Transmission Identification** 9
- 3.1 Transmission Code, Reading 9
- **4 Engine Codes - Engine Allocation** 12
- 4.1 Codes 12
- **5 Capacity** 13
- **6 Special Tools** 14

30 - Clutch 15
- **1 Overview - Dual Clutch** 15
- **2 Dual Clutch, Removing and Installing** 18
- 2.1 Remove Clutch End Cover 18
- 2.2 Clutch End Cover, Installing 20
- 2.3 Dual Clutch, Removing 24
- 2.4 Dual Clutch, Installing and Adjusting 25
- **3 Special Tools** 32

34 - Controls, Housing 33
- **1 Electrical and Electronic Components, Component Locations in DSG® Transmission** 33
- 1.1 DSG Transmission Mechatronic J743 , Removing and Installing, Transmission Installed 34
- 1.2 DSG transmission Mechatronic J743 , Removing and Installing, Transmission Removed 45
- 1.3 Transmission Input Speed Sensor G182 and Clutch Oil Temperature Sensor G509 , Removing and Installing 53
- **2 Transmission Fluid Cooler, Removing and Installing** 55
- **3 Oil Pump, Removing and Installing** 57
- **4 Selector Shaft Lever Gasket, Replacing** 60
- **5 Selector Mechanism** 62
- 5.1 Overview - Selector Mechanism, Vehicles through 02/2009 62
- 5.2 Selector Lever Cable, Removing and Installing, through 02/2009 64
- 5.3 Overview - Selector Mechanism, Vehicles from 03/2009 72
- 5.4 Selector Mechanism, Removing and Installing, Vehicles from 03/2009 73
- 5.5 Selector Lever Cable, Checking 80
- 5.6 Selector Lever Cable, Adjusting 80
- 5.7 Selector Lever, Emergency Release 82
- 5.8 Selector Lever Handle, Removing and Installing 82
- 5.9 Button in Handle, Moving into Installation Position 85
- 5.10 Selector Mechanism, Checking 86

Copyright by Volkswagen AG. Volkswagen AG does not guarantee or accept any liability with respect to the correctness of information in this document. Copyright by Volkswagen AG. Transmitted or communicated by copyright holder in the form of electronic data, in whole or in part, is not permitted without the express written consent of Volkswagen AG.

6 Transmission, Removing and Installing, Jetta from MY 2005 , Golf Wagon from MY 2007 and Golf Wagon from MY 2010 . . . 88
6.1 Transmission, Removing . . . 88
6.2 Transmission, Installing . . . 97
6.3 Tightening Specifications . . . 100
7 Transmission, Removing and Installing, Jetta from MY 2011 . . . 102
7.1 Transmission, Removing, Jetta MY 2011 with 2.0L 103 kW Diesel . . . 102
7.2 Transmission, Installing, Jetta MY 2011 with 2.0L 103 kW Diesel . . . 113
7.3 Transmission, Removing, Jetta MY 11, 2.0L 147 kW Gasoline Engine . . . 115
7.4 Transmission, Installing, Jetta MY 11, 2.0L 147 kW Gasoline Engine . . . 127
7.5 Tightening Specifications . . . 129
8 Transmission, Transporting and Securing to Assembly Stand . . . 131
9 Transmission Fluid and Transmission Fluid Filter . . . 132
9.1 Transmission Fluid Filter, Replacing . . . 132
9.2 Fluid Level, Checking and Filling . . . 133
9.3 Fluid, Draining and Filling . . . 136
10 Special Tools . . . 139

35 - Gears, Shafts . . . 144
1 No Repairs to Gears and Shafts . . . 144

39 - Final Drive, Differential . . . 145
1 Flange Shaft or Stub Shaft Seals, Replacing . . . 145
1.1 Component Location Overview - Seals . . . 145
1.2 Left Flange Shaft Seal, Replacing . . . 146
1.3 Right Flange Shaft or Stub Shaft Seal, Replacing . . . 148
2 Special Tools . . . 151
3 Revision History . . . 153

Protected by copyright. Copying for private or commercial purposes, in part or in whole, is not permitted unless authorised by Volkswagen AG. Volkswagen AG does not guarantee or accept any liability with respect to the correctness of information in this document. Copyright by Volkswagen AG.

00 – General, Technical Data

1 General Repair Information

(Edition 09.2015)

⇒ “1.1 Tools”, page 1

⇒ “1.2 Transmission”, page 1

⇒ “1.3 Brief Overview - Guide”, page 2

⇒ “1.4 O-Rings, Gaskets and Seals”, page 3

⇒ “1.5 DSG® Transmission Fluid”, page 3

⇒ “1.6 Bolts and Nuts”, page 5

⇒ “1.7 Electrical Components”, page 5

This Repair Manual Was Developed for the Technician.

It should offer support and help. Using ELSA offers the ability to submit comments and/or improvement suggestions to Volkswagen.

– Click the Feedback Button at the top in the menu toolbar.

More Information on the Dual-Clutch Transmission DSG®.

For more information about the transmission functions, Refer to Self Study Program DSG transmission 02E.

1.1 Tools

A complete list of special tools and workshop equipment used in the repair manual can be found at the beginning of each repair section and in the “Special Tools and Workshop Equipment” folder.

Uncertainties often exist on smaller screws with lower tightening specifications. The Torque Wrench 2-10Nm - VAG1783- can be used on these screws.

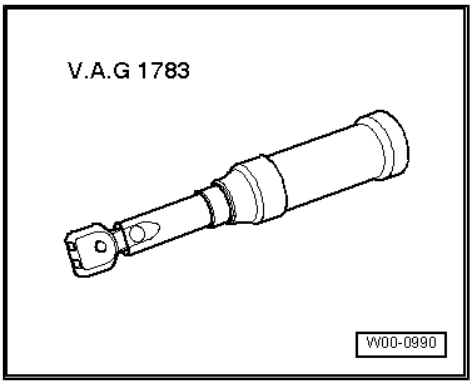

1.2 Transmission

Always make sure that no dirt or contaminants enter an »open« transmission. Any dirt that enters can cause transmission failure, especially if the DSG Transmission Mechatronic - J743- and/or the oil pump are »exposed«.

- Do not run the engine and do not tow the vehicle if the transmission cover is removed or if there is no transmission fluid inside the transmission.
- Thoroughly clean the connection points and the area around them first, and then loosen them.
- When installing the transmission, make sure the alignment sleeves are seated correctly between the engine and the transmission.

- Place the removed parts on a clean surface and cover them so that they do not become contaminated. Use foil and paper. Only use lint-free cloths.
- Only install clean components. Install original parts immediately after removing them from their packaging.
- Carefully cover or seal opened components if repairs are not performed immediately.

1.3 Brief Overview - Guide

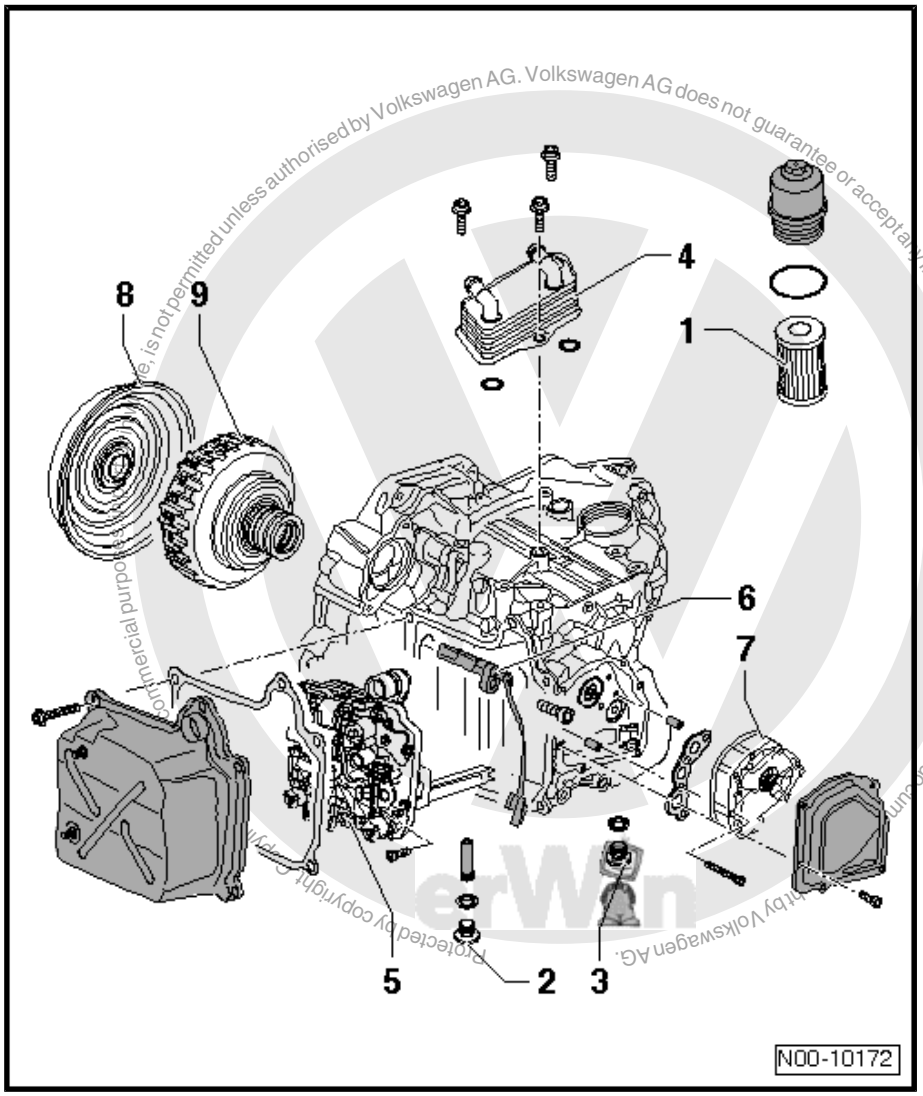

1 - Filter

- ❑ Refer to ⇒ “9 Transmission Fluid and Transmission Fluid Filter”, page 132
- ❑ Information on changing filter. Refer to ⇒ “1.5.2 Transmission Fluid Filter, When To Change ”, page 4 .

2 - Check Plug.

- ❑ Refer to ⇒ “9 Transmission Fluid and Transmission Fluid Filter”, page 132
- ❑ Near the pendulum support

3 - Drain Plug

- ❑ Refer to ⇒ “1.5 DSG® Transmission Fluid”, page 3
- ❑ This bolt is no longer installed as of 09/2004. The oil can be drained through the check plug

4 - Transmission Fluid Cooler

- ❑ Refer to ⇒ “2 Transmission Fluid Cooler, Removing and Installing”, page 55

5 - DSG Transmission Mechatronic - J743-

- ❑ Refer to ⇒ “1 Electrical and Electronic Components, Component Locations in DSG® Transmission”, page 33

6 - Transmission Input Speed Sensor - G182- and Clutch Oil Temperature Sensor - G509-

- ❑ Refer to ⇒ “1 Electrical and Electronic Components, Component Locations in DSG® Transmission”, page 33 .

7 - Oil Pump

- ❑ Refer to ⇒ “3 Oil Pump, Removing and Installing”, page 57

8 - Clutch Cover for the DSG®

9 - Dual Clutch

- ❑ Refer to ⇒ “1 Overview - Dual Clutch”, page 15

Protected by copyright. Copying for commercial purposes, is not permitted unless authorised by Volkswagen AG. Volkswagen AG does not guarantee or accept any liability with respect to the correctness of information in this document. Copyright by Volkswagen AG.

1.4 O-Rings, Gaskets and Seals

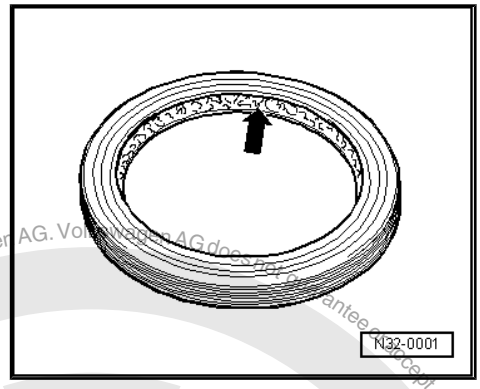

- Replace the O-rings, seals and gaskets.
- Flange shaft and selector shaft seals are illustrated as shaft seals.
- After removing the gaskets and seals, check the contact surfaces on the housing or shaft for burrs resulting from removal or damage.
- Before installing the seals, lightly oil the outer circumference and fill the space between the sealing lips -arrow- halfway with Grease - G 052 128 A1- .
- Only use DSG® transmission fluid. Other lubricants cause malfunctions.
- The open side of the gaskets point toward the fluid to be sealed in.
- After installing, check transmission fluid level and fill. Refer to ⇒ “9.2 Fluid Level, Checking and Filling”, page 133 .

1.5 DSG® Transmission Fluid

⇒ “1.5.1 Fluid Function”, page 3

⇒ “1.5.2 Transmission Fluid Filter, When To Change ”, page 4

⇒ “1.5.3 Fluid and Fluid Level Troubleshooting”, page 4

⇒ “1.5.4 Transmission Fluid Drain and Check Plug A ”, page 4

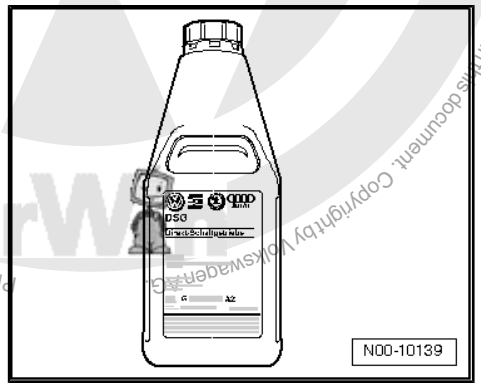

Shake the bottles before opening.

Fluid is available as an original part. Original part number. Refer to the Parts Catalog.

The Quality of Transmission Fluid Is Crucial to Transmission Function.

Do not mix additives into the transmission fluid. Do not fill with a different transmission fluid.

Determine the correct fluid and other important information. Refer to ⇒ “1.5.2 Transmission Fluid Filter, When To Change ”, page 4 .

The drained transmission fluid must not be used again.

> ⚠ **Caution**
>
> ***Be very careful when handling transmission fluid. Dispose of drained transmission fluid correctly.***

1.5.1 Fluid Function

The fluid does not just »lubricate« the transmission.

Imagine: the filter also transports the finest differential abrasive parts in both filters. The fluid makes sure the lubricating film does not wear off the differential tooth flanks. At the same time, it acts as a switch valve pressure medium to enable it to perform its functions.

It also seals the selector lever and helps the synchronizer rings when shifting gears. The fluid conserves and transports warmth

Protected by copyright. Copying for private or commercial purposes, in part or in whole, is not permitted unless authorized by Volkswagen AG. Volkswagen AG does not guarantee or accept any liability with respect to the correctness of information in this document. Copyright by Volkswagen AG.

and minimizes noise. The fluid performs many functions. The DSG® transmission fluid fulfills many requirements.

To maintain this degree of performance, the filter on the transmission should be replaced during the oil maintenance service.

1.5.2 Transmission Fluid Filter, »When To Change«

The transmission fluid filter does not need to be changed in every case.

Do Not Replace the Filter If

- The transmission fluid cooler or its O-rings were replaced and no coolant has entered the transmission fluid.
- The selector shaft seal was replaced.
- The flange or stub shaft seal was replaced.
- Leaking Mechatronic covers, multi-plate clutch or oil pump were replaced.
- The Transmission Input Speed Sensor - G182- with Clutch Oil Temperature Sensor - G509- was replaced.

The Filter Must Be Replaced If

- The 60,000 km maintenance interval was reached.
- Coolant has entered the transmission fluid.
- Metal shavings were found in the transmission fluid.
- The clutch is burned or has a mechanical fault.

1.5.3 Fluid and Fluid Level Troubleshooting

Fluid and Fluid Level Troubleshooting

For more information regarding the fluid. Refer to ⇒ “1.5.1 Fluid Function”, page 3 . But the fluid cannot disappear »without a trace«.

Fluid can only be missing if it has leaked from the transmission.

Transmission Lubricated

– Determine where the fluid has leaked out of the transmission. Repair this leak first. Fill with new transmission fluid and make sure the level is »correct«. Refer to ⇒ “9 Transmission Fluid and Transmission Fluid Filter”, page 132 .

Filling the fluid »just in case« does not correct a malfunction. It does not help to find the malfunction and it gives a false sense of security.

1.5.4 Transmission Fluid Drain and Check Plug -A-

Through transmission production date “09/20/2004”, transmissions were installed with two plugs.

Then the second plug was discontinued so that draining oil and adjusting the oil level can both be done using the plug -A-.

A plastic overflow tube is located behind this plug (with 8 mm hex socket head, tightening specification: 3 Nm). Its length determines the fluid level in the transmission.

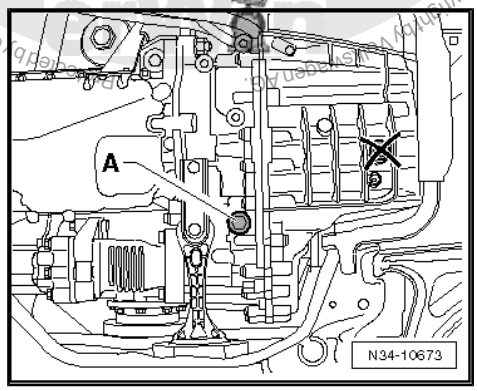

Copyright. Copyright by Volkswagen AG. Volkswagen AG does not guarantee or accept any liability with respect to the correctness of information in this document. Copying for private or commercial purposes, in part or in whole, is not permitted unless authorised by Volkswagen AG.

1.6 Bolts and Nuts

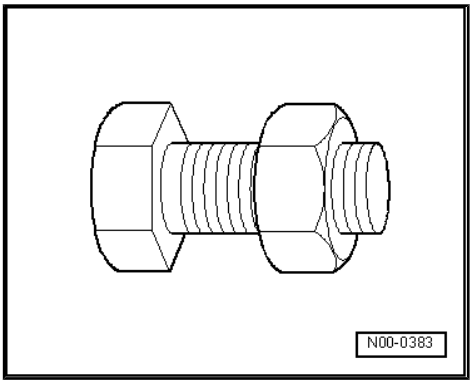

- Loosen or tighten bolts and nuts on covers or housing diagonally.
- The tightening specifications given apply to unoiled bolts and nuts.
- Use a wire brush to clean the threads of the bolts that were installed with locking fluid. Install the bolts with Locking Fluid - AMV 185 101 A1- .
- Clean all threaded holes containing self-locking bolts, with a thread tap to remove any locking fluid residue. Otherwise the bolts could shear the next time they are removed.
- Always replace self-locking bolts and nuts.

1.7 Electrical Components

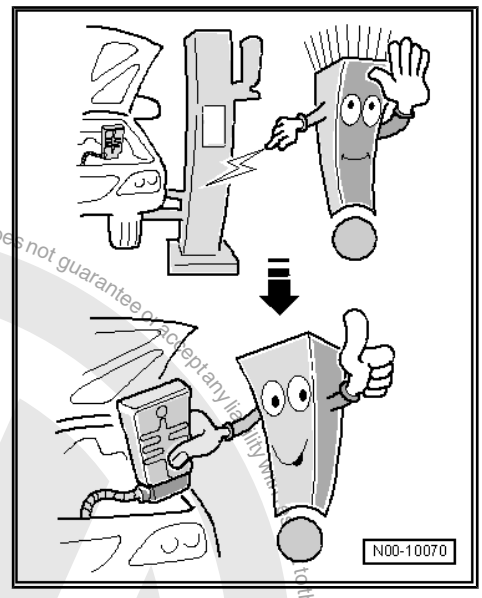

Almost everyone has been shocked at one time or another when coming into contact with a metal object. The reason for this is the build-up of static electricity in the human body. This charge can damage the electrical components in the transmission and the selector mechanism when touching them.

– Touch a grounded object, such as, a water pipe or a vehicle hoist, before working on electrical components. Do not touch the connector terminals directly.

Protected by copyright. Copying for private or commercial purposes, in part or in whole, is not permitted unless authorised by Volkswagen AG. Volkswagen AG does not guarantee or accept any liability with respect to the correctness of information in this document. Copyright by Volkswagen AG.

2 Troubleshooting

⇒ “2.1 Troubleshooting, General Information”, page 6

⇒ “2.2 Transmission Control Module Malfunction Behavior Information”, page 6

⇒ “2.3 Fault Finding, Special Information”, page 7

2.1 Troubleshooting, General Information

Before beginning any repair work, the cause of damage should be determined using “Guided Fault Finding”.

Perform `Guided Fault Finding` using the Vehicle Diagnostic Tester .

2.2 Transmission “Control Module Malfunction Behavior” Information

The control module operates with highly developed software. This software has the ability to execute electrical functions, monitor and control within milliseconds. Everything modern transmission electronics »have to offer« »is contained« in this control module. This should also be kept in mind during troubleshooting.

However, no electronics can do what they were not designed to do. Likewise, it is not possible to detect electronically where the transmission housing is leaking and oil is escaping, for example. However, it is possible to detect the effects of »low oil«. A failure in “gear monitoring” would be recognized causing the control module to respond that both clutches are open (no traction).

This should be known during troubleshooting and also when working with the Volkswagen tester. It is possible that the cause for the malfunction might not be found during `Guided Fault Finding`.

In addition to the highly developed software, much has been done to protect the transmission should there be a malfunction (safety features). And so, when necessary, malfunctions are saved and a replacement program is started.

Control Module Behavior During A Malfunction

If a component in the transmission malfunctions, the control module reacts with a replacement function. In order to protect the transmission, there are four different kinds of malfunctions:

1 - The malfunction is so minor that it is possible to continue driving with a replacement program while maintaining driving safety. The driver is not notified of this via the Selector Lever Transmission Range Display - Y5- . The display shows the selector lever position normally. If changes in driving behavior can even be detected.

2 - The individual lever positions blink in the Selector Lever Transmission Range Display - Y5- . This signals to the driver that the gear selection is currently not possible. Example: Driving in reverse, lever in “R” and vehicle drives backwards. If “D” is engaged in this situation, the letter “D” blinks in the Selector Lever Transmission Range Display - Y5- . In this case, the control module prevents 1st gear from being engaged to avoid damaging the transmission. The gear is only engaged when the vehicle is stopped. If testing this, do so carefully!

3 - The Selector Lever Transmission Range Display - Y5- is completely lit up and blinking. The selector lever position is indicated/highlighted. Example: the transmission fluid temperature is too high. Reasons could include: towing a trailer

Copyright by Volkswagen AG. Volkswagen AG does not guarantee or accept any liability with respect to the correctness of information in this document.

with too large of a load, accessories installed on the front of the vehicle, »lack of cooling air«.

4 - The selector lever position engaged cannot be recognized. The Selector Lever Transmission Range Display - Y5- blinks. Differences in the driving and shifting can definitely be felt. It is not possible to shift into reverse. There is a »serious malfunction«, a sub-transmission is switched off, transmission repair is necessary.

2.3 Fault Finding, Special Information

⇒ “2.3.1 Transmission Range Display, No R ”, page 7

⇒ “2.3.2 Touch Function Malfunction, Not Changing Gears as Usual”, page 7

⇒ “2.3.3 Drive Faulty - Insufficient Oil Suspected”, page 7

⇒ “2.3.4 No Faults are Stored”, page 7

⇒ “2.3.5 Faults are Stored”, page 8

⇒ “2.3.6 Malfunctions Outside Transmission”, page 8

2.3.1 Transmission Range Display, No “R”

Simultaneous lighting of all segments on the transmission range display indicates the transmission is in emergency mode. The vehicle can no longer drive in reverse.

2.3.2 Touch Function Malfunction, Not Changing Gears as Usual

Check the lock washers on the selector lever cable mounting bracket at the top of the transmission. The washer -B- especially must never be used twice.

The lock washer -B- can deteriorate if it loses its »residual stress«. The -arrow- points to the selector lever cable adjustment screw.

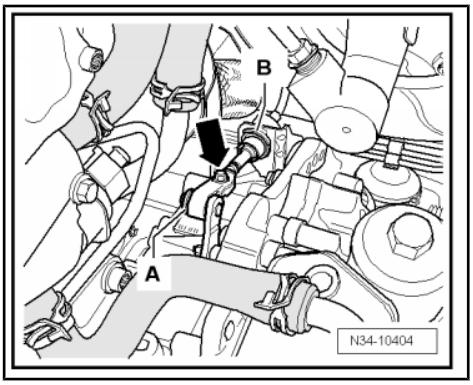

2.3.3 »Drive« Faulty - Insufficient Oil Suspected

First click here once. Refer to
⇒ “1.5 DSG® Transmission Fluid”, page 3 .

Only add fluid if it has definitely been seen that oil has leaked out. Under any other circumstances it is just an »unnecessary expense« that does not help.

2.3.4 No Faults are Stored

In this case, it is especially up to the technician to find the solution. Experience shows that often a »fault« that is attributed to the transmission was caused by other components or assemblies.

It can be the case that poor shifting behavior is a result of insufficient engine air supply. Do not make such a mistake.

If such faults are to be eliminated, work can be performed sensibly with the VWtester.

Protected by copyright. Copying for private or commercial purposes, partially or completely, is not permitted unless authorised by Volkswagen AG. Volkswagen AG does not guarantee or accept any liability with respect to the correctness of information in this document. Copyright by Volkswagen AG.

2.3.5 Faults are Stored

Find out which faults have been stored. Volkswagen testers offer `Guided Fault Finding`. Using `Guided Fault Finding` correctly can determine the cause of many malfunctions.

2.3.6 Malfunctions »Outside Transmission«

If, for example, there is a malfunction in the transmission: “ABS signal missing” is stored in the transmission and perhaps another control module also says: “ABS signal missing”: Then do not continue to suspect the transmission control module is »faulty«.

The entry simply means: the transmission (and possibly other control modules) is waiting for a signal from the BUS but is not receiving it. In this case, the ABS control module would have a problem. The DSG Transmission Mechatronic - J743- must never be removed here under any circumstances. In this example, the fault points to problems with the ABS.

Protected by copyright. Copying for private or commercial purposes, in part or in whole, is not permitted unless authorized by Volkswagen AG. Volkswagen AG does not guarantee or accept any liability with respect to the correctness of information in this document. Copyright by Volkswagen AG.

3 Transmission Identification

⇒ “3.1 Transmission Code, Reading”, page 9

Example -arrow-:

GKF - Transmission Code

10.05.2 - 05/10/2002

14 - Plant Code

14 15 - Time

001 - Serial Number

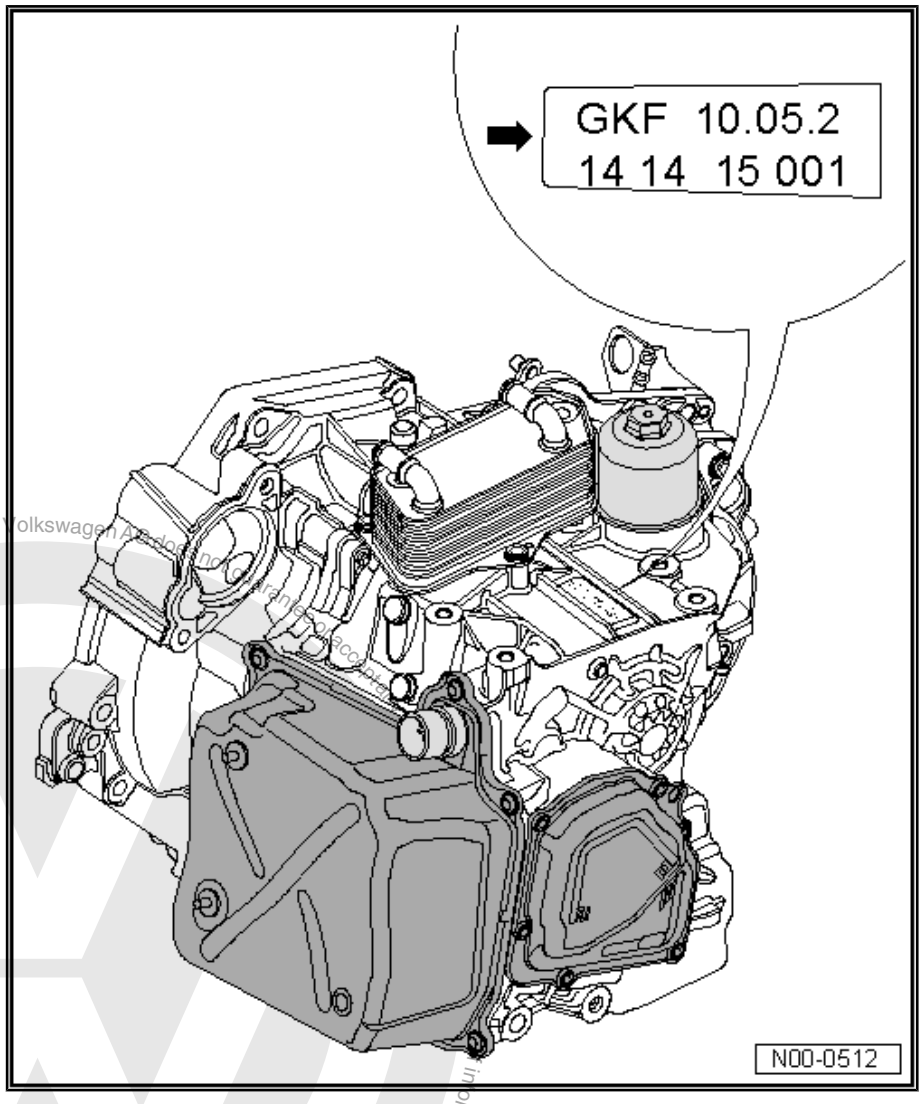

On some transmissions, additional code letters are applied on top of the transmission near the selector lever cable -arrows-.

The transmission code is also listed on the vehicle data label.

If the vehicle data label is not available, a different transmission was accidentally installed or there is no definite way to identify the installed transmission, read the transmission code letters directly from the transmission.

Reading the code directly off the transmission. Refer to ⇒ “3.1 Transmission Code, Reading”, page 9 .

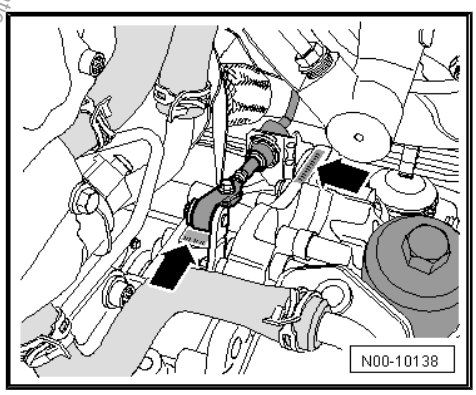

3.1 Transmission Code, Reading

The transmission code is on every transmission in at least two different locations.

Commercial purposes, in part or in whole, is not permitted unless authorised by Volkswagen AG. Volkswagen AG does not guarantee or accept any liability with respect to the correctness and completeness of the information in this document.

One is on top of the transmission near the selector lever cable -two arrows-.

If these cannot be read or are »on the head«, the transmission code can also be read under the left subframe mount transmission bracket.

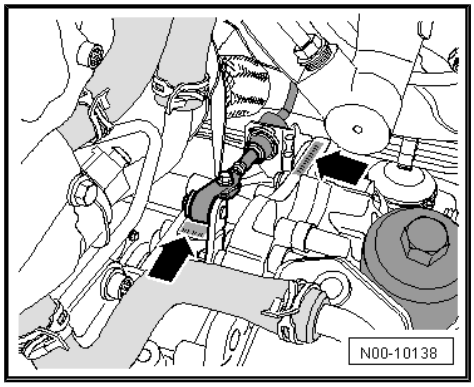

To read the transmission code letters under the transmission bracket directly from the transmission, the engine and transmission must be supported. The left subframe mount transmission bracket -A- must be removed. It is important to lower the engine/transmission just enough until it is possible to slide the bracket toward the rear. If lowered any farther, the pendulum support could be damaged. After being assembled, the selector lever cable must be adjusted. Refer to
⇒ “5.6 Selector Lever Cable, Adjusting” page 80 .

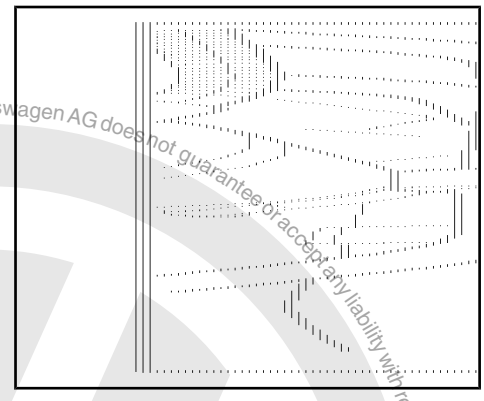

Perform the Following:

– Remove the air filter housing.

♦ Vehicles with a gasoline engine. Refer to ⇒ Rep. Gr. 24 ; Air Filter; Air Filter Housing, Removing and Installing .

♦ Vehicles with a diesel engine. Refer to ⇒ Rep. Gr. 23 ; Diesel Direct Injection System; Air Filter Housing, Removing and Installing .

– Remove the battery and the battery tray -arrows-. Refer to ⇒ Electrical Equipment; Rep. Gr. 27 ; Battery; Battery, Removing and Installing .

Mount the Engine Support Bridge - 10-222A- and support the engine with the transmission. Do not lift.

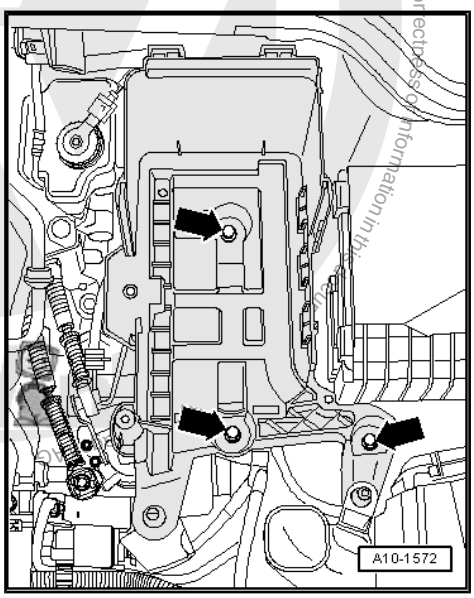

Protected by copyright. Copying for private or commercial purposes, in part or in whole, is not permitted unless authorised by Volkswagen AG. Volkswagen AG does not guarantee or accept any liability with respect to the correctness of information in this repair manual.

– Remove the bolts -1 and 2- from the transmission bracket -A-.

The bolts must be replaced.

– Then slightly lower the engine/transmission using the Engine Support Bridge - 10-222A- spindles until the transmission bracket can be removed.

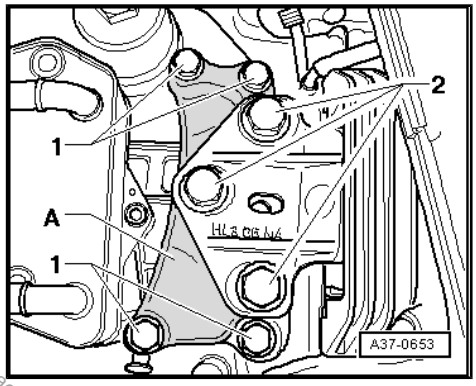

In most cases two turns on the spindle are enough to remove the bracket in direction of -arrow-.

After reading the transmission code, re-assemble in reverse order of removal.

– Follow all the instructions.

– Replace all the bolts from the left subframe mount.

– Install all new bolts first by hand.

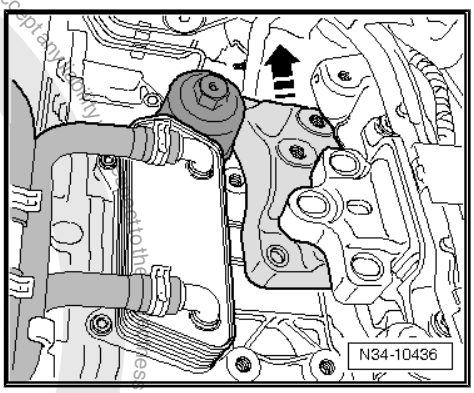

– Attach the transmission bracket -A- to the transmission using the bolts -1 and 2-. Refer to
⇒ “6.3 Tightening Specifications”, page 100 .

– After installing the transmission bracket, always adjust the selector lever cable. Refer to
⇒ “5.6 Selector Lever Cable, Adjusting”, page 80 .

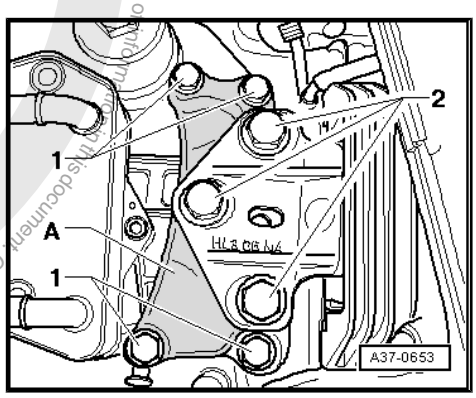

Protected by copyright. Copying for private or commercial purposes, in part or in whole, is not permitted unless authorised by Volkswagen AG. Volkswagen AG does not guarantee or accept any liability with respect to the correctness of information in this document. Copyright by Volkswagen AG.

4 Engine Codes - Engine Allocation

⇒ “4.1 Codes”, page 12

4.1 Codes

If original parts are needed for a repair, always pay attention to the transmission codes.

DSG Transmission 02E				
	JBT, JPS, KDC, KNF, KPY, KVV, LRC	GPW, GYQ, HLH, HQH, HQQ, HQN, HXU, JPL, KCW, KMZ, KPQ, LQS, MKJ, MLW	HBP, HFQ, HLE, HQF, HQL, HXS, JPJ, KCU, KMW, KMX, KPS, KQC, LQT, LTD, LQV, LTE, MFL, MFM, MSU, MSV, NJK, NLP, PBF, PPY	HBQ, HRW, HUS, HUT, HXW, JPP, KCZ, KNC, KPV, LQZ, LTL, MMA, MSX, MSY, NJL, NJM, NLQ, NVW, PBG, PPZ, PQL
	1.4L - 103 kW TSI 1.4L - 125 kW TSI	1.9L - 74 kW TDI 1.9L - 77 kW TDI	2.0L - 100 kW TDI 2.0L - 103 kW TDI 2.0L - 125 kW TDI	2.0L - 147 kW TFSI
installed in	Golf Wagon from MY 2007, Golf Wagon from MY 2010, Jetta from MY 2005 and Jetta from MY 2011			

For the following data. Refer to the Parts Catalog.

- The individual gear ratios
- Transmission fluid
- Clutch allocation

Protected by copyright. Copyright by Volkswagen AG.

5 Capacity

Capacities	DSG Transmission 02E
Refill	Refer to ⇒ Fluid Capacity Tables; Rep. Gr. 03
Change	Refer to ⇒ Fluid Capacity Tables; Rep. Gr. 03
Change after removing and installing the Mechatronic with the transmission installed	Refer to ⇒ Fluid Capacity Tables; Rep. Gr. 03
Grease	Transmission fluid for DSG® transmission 02E. Refer to the Parts Catalog .

Protected by copyright. Copying for private or commercial purposes, in part or in whole, is not permitted unless authorised by Volkswagen AG. Volkswagen AG does not guarantee or accept any liability with respect to the correctness of information in this document. Copyright by Volkswagen AG.

6 Special Tools

Special tools and workshop equipment required

- Torque Wrench 2-10Nm - VAG1783-

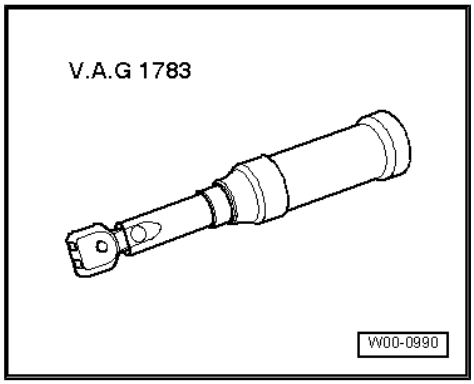

Protected by copyright. Copying for private or commercial purposes, in part or in whole, is not permitted unless authorised by Volkswagen AG. Volkswagen AG does not guarantee or accept any liability with respect to the correctness of information in this document. Copyright by Volkswagen AG.

30 – Clutch

1 Overview - Dual Clutch

Dual Clutch General Information

The term »clutch« is not completely accurate on closer examination. DSG® clutches always contain at least two »clutches« which is why the term “dual clutch” is more appropriate. In this case, the clutch has two clutch disc packs - that is, a wet clutch. The outer, larger clutch plate pack is called “K 1” (clutch 1). The “K 1” shifts reverse gear and »1st«, »3rd« and »5th« gears. The inner, smaller “K 2” (clutch 2) shifts the gears »2«, »4« and »6«.

Assembling the dual clutch requires special care, because all of the components were balanced to each other at the manufacturer. When positioning components during installation, do not rotate out of their original position, otherwise imbalances will occur, creating diminished shift comfort and life span.

Replacement clutches are supplied with the circlip already installed.

To avoid the risk of turning parts from one another in the first place, it is shown here how the clutch is assembled in the transmission housing and installed. Follow the descriptions exactly. Refer to ⇒ “2 Dual Clutch, Removing and Installing”, page 18 .

Replacement Part Package

Protected by copyright. Copying for private or commercial purposes, in part or in whole, is not permitted unless authorised by Volkswagen AG. Volkswagen AG does not guarantee or accept any liability with respect to the correctness of information

1 - Dual Clutch with Circlip

> **Caution**
>
> *The drive plate (upper section of the dual clutch) of a new clutch is not secured with the circlip, it only sits »taut« in the clutch.*
>
> *The drive plate must remain engaged between the teeth of the outer clutch plate carrier.*
>
> *If the drive plate is loosened, the plates in the dual clutch can slip out of place and it cannot be adjusted correctly during installation under the circumstances.*

2 - Circlip

- Quantity: 10, with various thicknesses for adjustment
- When installing the dual clutch, the thickness of the circlip must be determined. Refer to ⇒ page 28

3 - Clutch End Cover

4 - Clutch End Cover Circlip

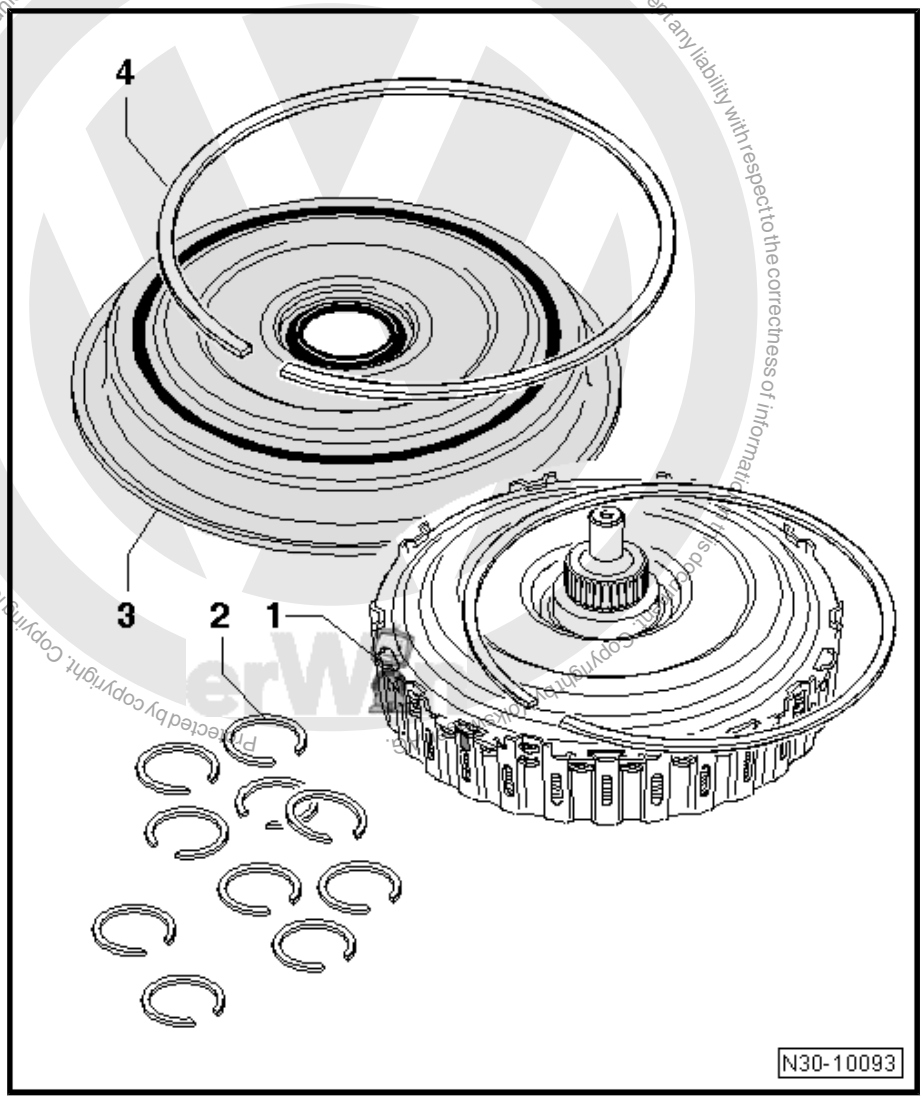

Individual Components of Disassembled Dual Clutch

> **Caution**

1 - DSG® Clutch/Clutch Housing

- ❑ Outer clutch plate carrier

2 - Seal

- ❑ Quantity: 4

3 - Inner Clutch Plate Carrier

- ❑ Do not remove

> ⚠ **Caution**
>
> ***Do not lift or remove the inner clutch plate carrier under any circumstances. The clutch plates could rotate themselves.***

4 - Outer Clutch Plate

- ❑ Quantity: 4

5 - Inner Clutch Plate

- ❑ Quantity: 4

6 - Thrust Washer

7 - Circlip

- ❑ If the circlip was removed in order to reinsert the plates, it should be replaced with a new ring of the same thickness.

8 - Circlip

- ❑ After installing a new dual clutch, redetermine the thickness. Refer to ⇒ page 28 .

9 - Drive Plate

10 - Circlip

- ❑ Replace after removing
- ❑ Do not install any wavy circlips

Protected by copyright. Copying for private or commercial purposes, in part or in whole, is not permitted unless authorised by Volkswagen AG. Volkswagen AG does not guarantee or accept any liability with respect to the correctness of information in this document. Copyright by Volkswagen AG.

Protected by copyright. Copying for private or commercial purposes, in part or in whole, is not permitted unless authorised by Volkswagen AG. Volkswagen AG does not guarantee or accept any liability with respect to the correctness of information in this document. Copyright by Volkswagen AG.

2 Dual Clutch, Removing and Installing

⇒ “2.1 Remove Clutch End Cover”, page 18

⇒ “2.2 Clutch End Cover, Installing”, page 20

⇒ “2.3 Dual Clutch, Removing”, page 24

⇒ “2.4 Dual Clutch, Installing and Adjusting”, page 25

Before the dual clutch can be removed, remove the clutch end cover from the dual clutch. Refer to ⇒ “2.1 Remove Clutch End Cover”, page 18 .

2.1 Remove Clutch End Cover

Brief Description

The clutch cover closes the transmission toward the outside. A circlip holds the clutch end cover in place. Remove the circlip and pry out the clutch end cover. Always replace the clutch end cover and the locking ring. Never use a hammer to install the clutch cover and never lubricate the center seal or touch it. If this should occur, the clutch cover will certainly leak!

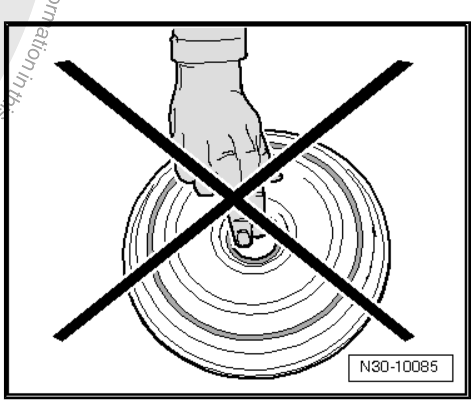

The transmission must be removed in order to work on the cover.

– Remove the transmission. Refer to ⇒ “6 Transmission, Removing and Installing, Jetta from MY 2005 , Golf Wagon from MY 2007 and Golf Wagon from MY 2010”, page 88 or ⇒ “7 Transmission, Removing and Installing, Jetta from MY 2011”, page 102 .

– Secure the transmission on the assembly stand. Refer to ⇒ “8 Transmission, Transporting and Securing to Assembly Stand”, page 131 .

– Place a Drip Tray under the transmission.

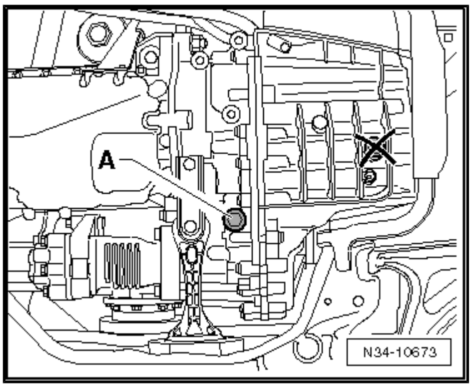

– Drain the fluid.

Through transmission production date “09/20/2004”, transmissions were installed with two plugs.

Then the second plug was discontinued so that draining oil and adjusting the oil level can both be done using plug -A-.

A plastic overflow tube is located in this hole (with 8 mm hex socket head, tightening specification: 3 Nm). Its length determines the fluid level in the transmission.

– Remove this overflow pipe and drain the remaining transmission fluid.

Note

Approximately 5 liters (5.28 qts) of transmission fluid will flow out. Leave the Drip Tray under the transmission.

– Install the overflow pipe and tighten it to 3 Nm.

– Install the drain plug with a new seal -arrow-.

Tightening Specification: 45 Nm

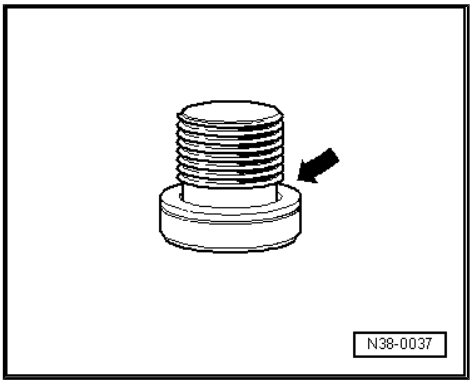

– Remove the filter if necessary.

There are Often Uncertainties as to Whether the Filter Must Be Replaced or Not.

The information on changing the fluid filter can help when making this decision. Refer to
⇒ “1.5.2 Transmission Fluid Filter, When To Change”, page 4 .

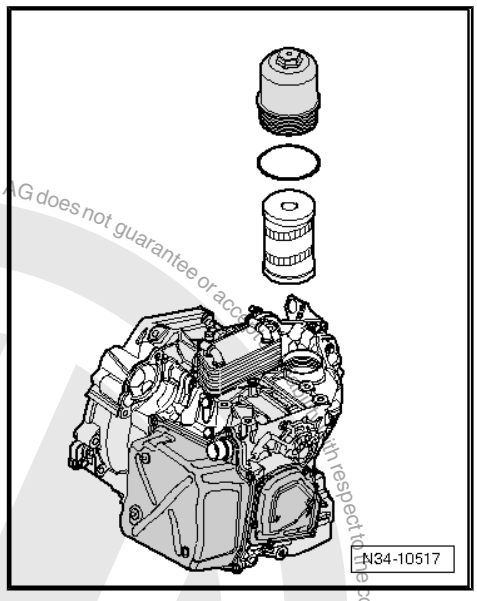

– Insert the new filter with the seat facing downward and tighten the housing to 20 Nm.

– After repairing, the filter does not have to be changed again when the filling fluid.

Removing the Clutch End Cover

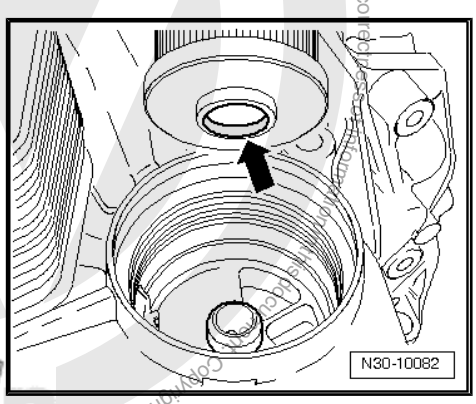

Protected by copyright. Copying for private or commercial purposes, in part or in whole, is not permitted unless authorised by Volkswagen AG. Volkswagen AG does not guarantee or accept any liability with respect to the correctness of information in this document. Copyright by Volkswagen AG.

– Pry out the circlip -2- for the clutch end cover with a screwdriver -1- in direction of -arrow- and remove.

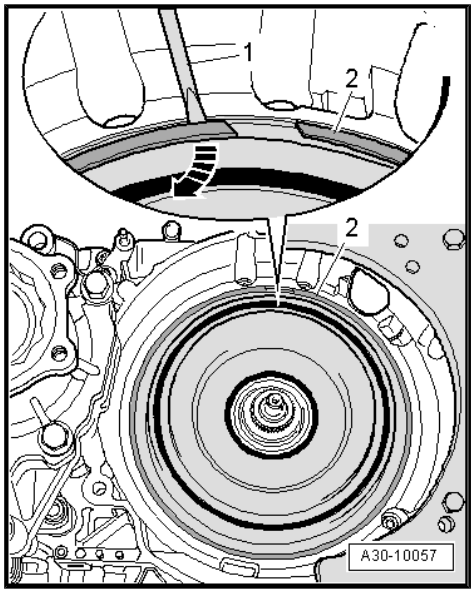

– Remove the clutch end cover -2- with a screwdriver -1- (or a pry bar) through the opening for the starter in the direction of -arrow- and then remove the clutch end cover.

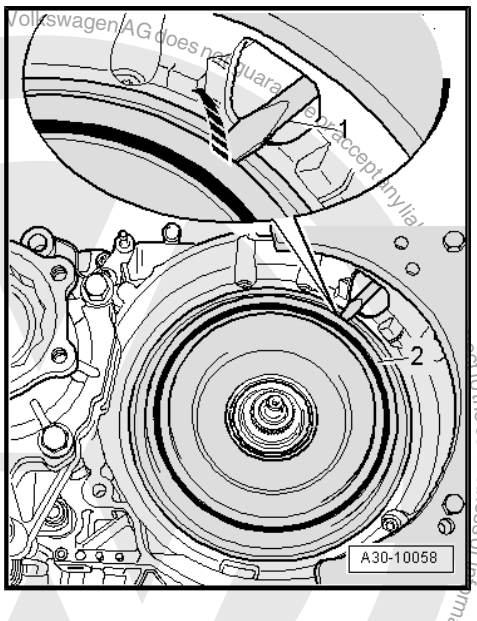

Note

- *The clutch end cover that was removed cannot be installed again.*
- *Only install a »new« clutch end cover. Refer to* *⇒ "2.2 Clutch End Cover, Installing", page 20* .

2.2 Clutch End Cover, Installing

⇒ "2.2.1 Clutch End Covers Delivered without Bushings, Installing", page 21

⇒ "2.2.2 Clutch End Covers Delivered with Bushings, Installing", page 23

There Are Two Types of Clutch End Covers.

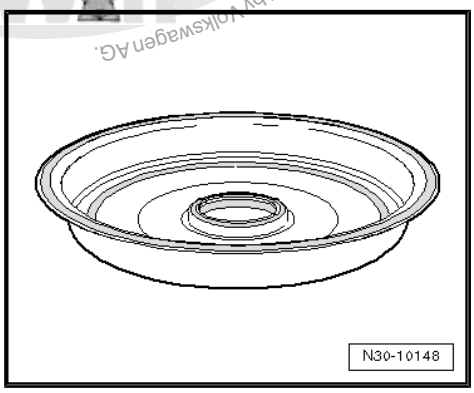

Protected by copyright. Copyright by Volkswagen AG.

- Clutch end covers that are delivered without bushings. Refer to
  ⇒ “2.2.1 Clutch End Covers Delivered without Bushings, Installing”, page 21 .
- Clutch end covers that are delivered with a white bushing. Refer to
  ⇒ “2.2.2 Clutch End Covers Delivered with Bushings, Installing”, page 23 .

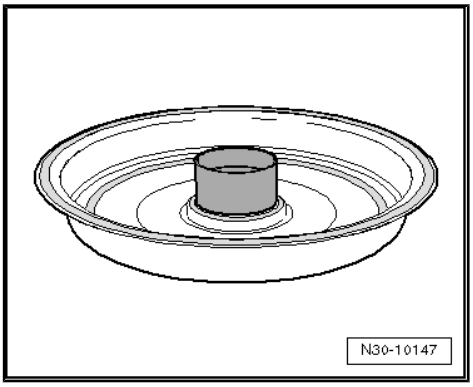

2.2.1 Clutch End Covers Delivered without Bushings, Installing

Special tools and workshop equipment required

- Clutch Cover Plate Guide Sleeve - T10302-

Always replace the clutch end cover and the locking ring. Never use a hammer to install the clutch cover and never lubricate the center seal or touch it.

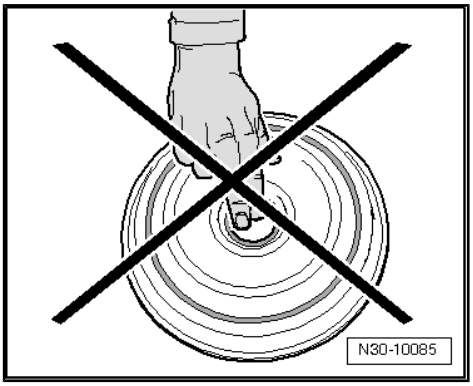

> **Caution**
>
> *Do not touch the hole in the center in a new clutch end cover. The clutch end cover must not be touched inside the hole, oiled or come into contact with any other substances in that area. Leaks will develop.*

– Only hold the clutch end cover as illustrated.

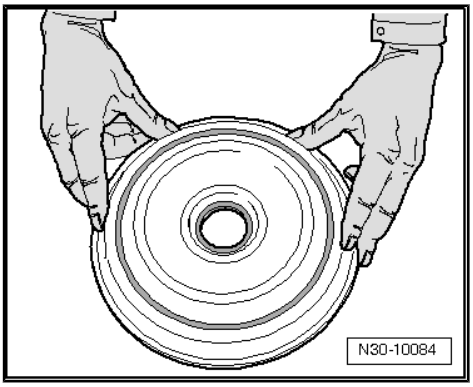

> **Caution**
>
> *Clean the assembly sleeve before use and do not use scratched assembly sleeves.*

The new clutch cover must not have any oil in the around the center seal and it must be dry.

– Clean end of clutch shaft if necessary.

Do not apply adhesive to inside of the cover.

– If this is done, carefully remove the adhesive!

Only coat outer edge of seal with DSG® transmission fluid.

– Place the sleeve on a level surface

The center seal on new clutch end cover must now be »pre-formed«:

Protected by copyright. Copyright by Volkswagen AG. Copying for private or commercial purposes, in part or in whole, is not permitted unless authorised by Volkswagen AG. Volkswagen AG does not guarantee or accept any liability with respect to the correctness of information in this document.

Protected by copyright. Copyright by Volkswagen AG. Volkswagen AG does not guarantee or accept any liability with respect to the correctness of information in this document. Copying for private or commercial purposes, in part or in whole, is not permitted unless authorised by Volkswagen AG.

– Guide the clutch end cover horizontally and evenly over the whole sleeve. This brings the sealing lip into its installation position.
– Remove the sleeve upward out of the clutch end cover and place it on the end of the clutch shaft.

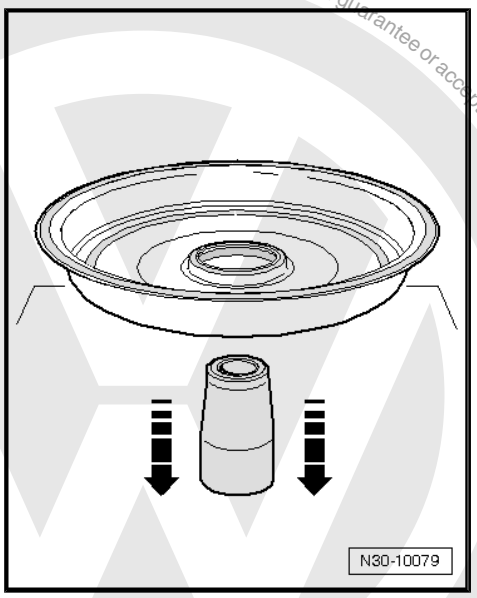

– Guide the clutch end cover horizontally over the sleeve and press it evenly onto its seat.

> ⚠ **Caution**
>
> ***Handle with care. Any type of impact on the clutch end cover will cause leaks.***

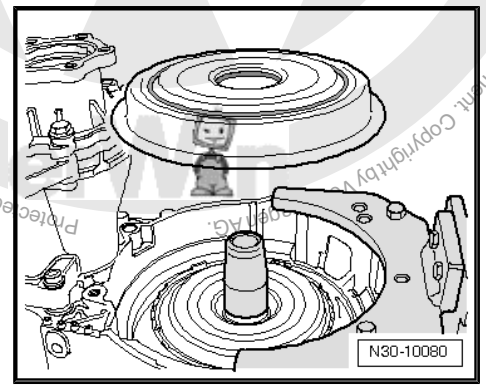

The clutch end cover can be carefully lifted in its seat using a screwdriver -arrow- until a »new« locking clip can be installed.

– Install the new circlip.
– Remove the Clutch Cover Plate Guide Sleeve - T10302- .

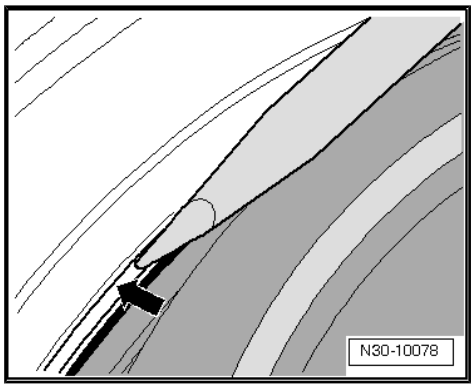

2.2.2 Clutch End Covers Delivered with Bushings, Installing

Always replace the clutch end cover and the locking ring. Never use a hammer to install the clutch cover and never lubricate the center seal or touch it.

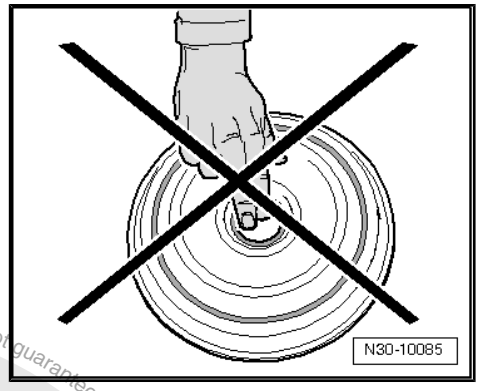

> **Caution**
>
> *Do not touch the hole in the center in a new clutch end cover. The clutch end cover must not be touched inside the hole, oiled or come into contact with any other substances in that area. Leaks will develop.*

Do Not Remove the Bushing!

The new clutch cover must not have any oil in the around the center seal and it must be dry.

– Clean the end of the clutch shaft if necessary.

Do not apply any stickers to inside of the clutch end cover.

– If this is done, carefully remove the adhesive!

Only coat outer edge of seal with DSG® transmission fluid.

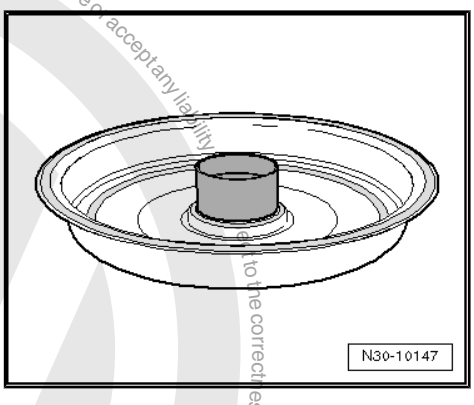

– Install the clutch end cover with bushing.

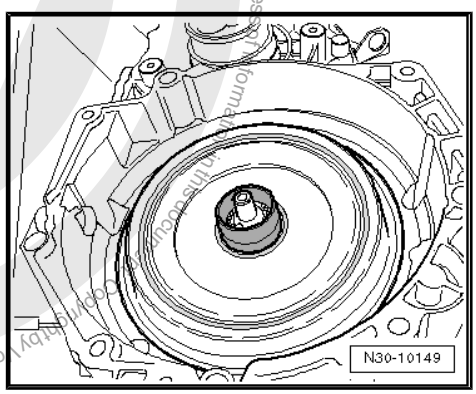

> **Caution**
>
> *Handle with care. Any type of impact on the clutch end cover will cause leaks.*

The clutch end cover can be carefully lifted in its seat using a screwdriver -arrow- until a »new« locking clip can be installed.

– Install the new circlip.

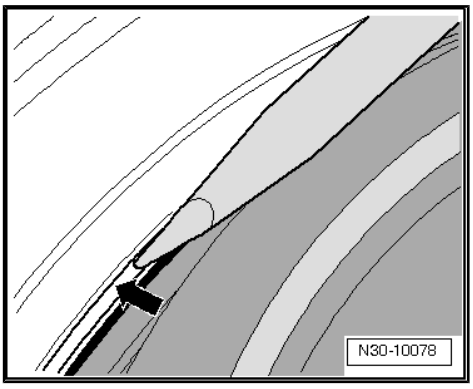

Protected by copyright. Copying for private or commercial purposes, in part or in whole, is not permitted unless authorised by Volkswagen AG. Volkswagen AG does not guarantee or accept any liability with respect to the correctness of information in this document. Copyright by Volkswagen AG.

– Only remove the bushing once the circlip is installed.

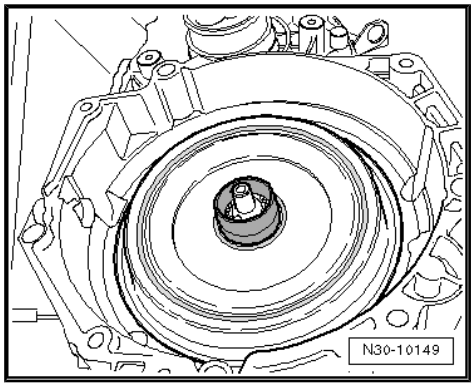

2.3 Dual Clutch, Removing

To remove and install the dual clutch, the transmission must be secured in a vertical position on the assembly stand.

– Remove the clutch end cover. Refer to ⇒ “2.1 Remove Clutch End Cover”, page 18 .

– Pry out the drive plate circlip -2- with a screwdriver -1- in direction of -arrow-.

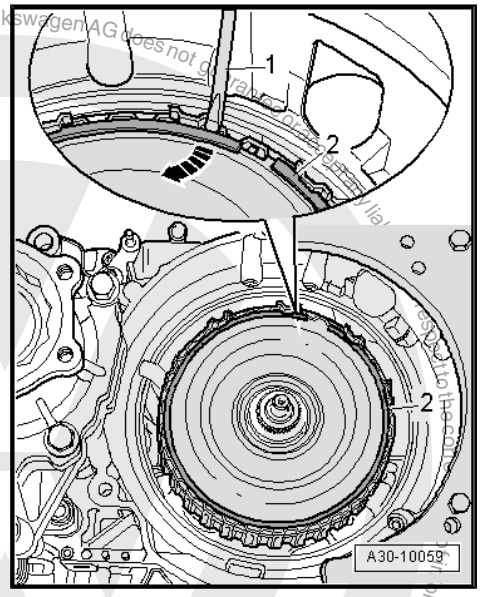

– Remove the drive plate in direction of -arrows-.

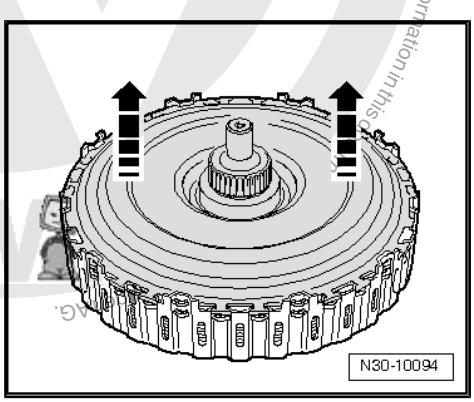

Protected by copyright. Copying for private or commercial purposes, in part or in whole, is not permitted unless authorised by Volkswagen AG. Volkswagen AG does not guarantee or accept any liability

– Remove the circlip -arrow-.

This circlip must be remeasured and replaced later when installing.

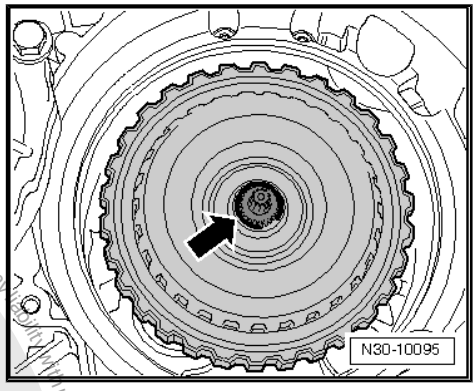

> **Caution**
>
> *Carefully remove the dual clutch. Make sure that no other parts of the clutch fall out. Never turn over the clutch for this reason!*

– Carefully remove the dual clutch from the transmission.

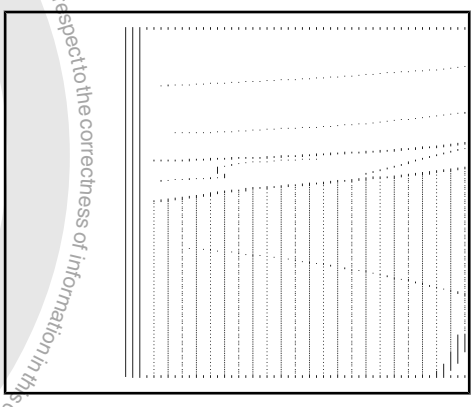

– Remove the pump shaft -A-.
– The pump shaft will be inserted first after the installation of the new clutch. Set the shaft down until then.

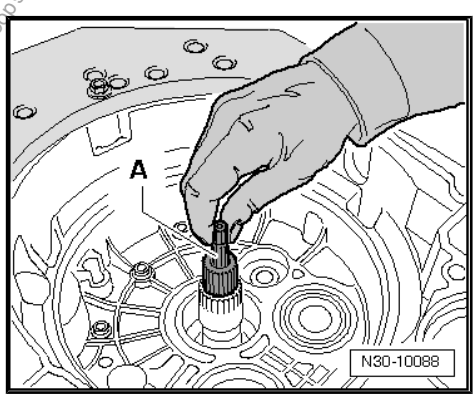

Protected by copyright. Copyright by Volkswagen AG. Volkswagen AG does not guarantee or accept any liability with respect to the correctness of information in this document. Copying for private or commercial purposes, in part or in whole, is not permitted unless authorised by Volkswagen AG.

2.4 Dual Clutch, Installing and Adjusting

Special tools and workshop equipment required

- Clutch Retaining Bar - T10303-

> **Caution**
>
> - *The drive plate of a new clutch is not secured with a circlip, it only sits "taut" in the clutch.*
> - *Thus, press the drive plate into the outer clutch plate carrier with both thumbs during the following steps.*
> - *The drive plate must remain engaged between the teeth of the outer clutch plate carrier.*
> - *If the drive plate is loosened, the clutch plates in the dual clutch can slip out of place. The dual clutch may not be correctly set during installation under certain circumstances.*

- Transmission must be turned »vertically in assembly bracket«. This is the only position in which the clutch axial play can later be adjusted without malfunctions.
- Make sure the transmission is secure inside the Holding Fixture - VW313- or Engine And Transmission Holder - VAS6095- . Refer to ⇒ “8 Transmission, Transporting and Securing to Assembly Stand”, page 131 . Do not turn it.
- The large lamella carrier is inserted in all clutch discs in the clutch. The large lamella carrier must not slipped out of the lowest clutch disc.
- Oil pump shaft is removed.
- Do not install any wavy circlips

– Take the dual clutch out of the packaging by pressing the drive plate into the outer clutch plate carrier with both thumbs.

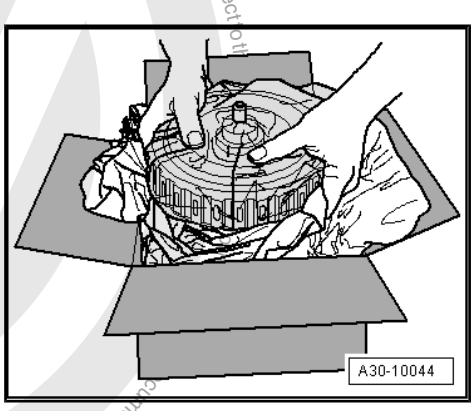

– Next, secure the drive plate in the outer clutch plate carrier with the “old” circlip -A- from the removed clutch.
- Do not use the new circlip that was delivered with the package.
- The circlip must be installed so that the tab of the drive plate -arrow- and the color-marked teeth of the outer clutch plate carrier are positioned between both ends of the circlip.

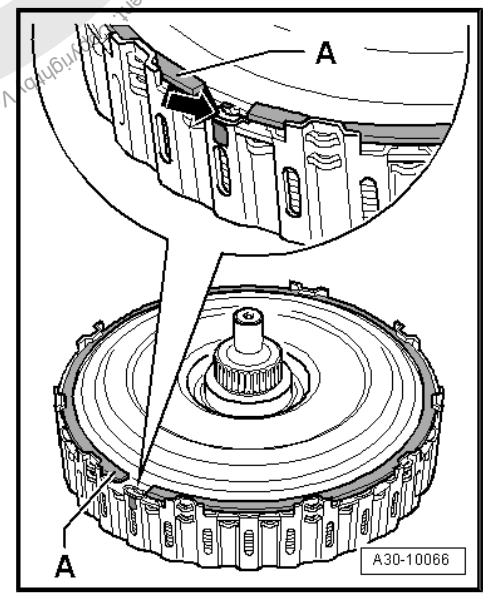

– Check the bottom of the dual clutch to see if the four hub gaskets are seated correctly and engage them in one another if necessary.
- The ends of the rings should not stand over one another.

– Turn the rings one time. They must move freely and must not stick.

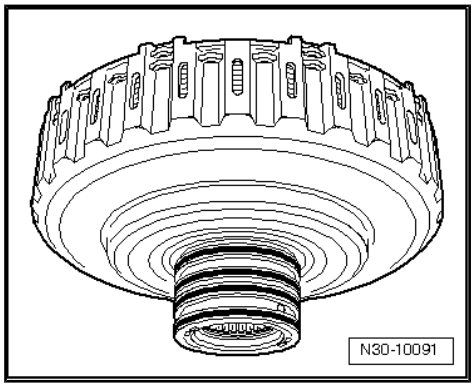

Copyright by Volkswagen AG. Volkswagen AG does not guarantee or accept any liability with respect to the correctness of information. Copying for private or commercial purposes, in part or in whole, is not permitted unless authorised by Volkswagen AG.

Important! Installation Position of the Drive Plate

– Verify that the protruding tab -arrow- of the drive plate is positioned between the color-marked teeth of the outer clutch plate carrier.

If no marking is available:

– Mark the location of the tab to the outer clutch plate carrier circumference with a waterproof marker as shown.

• When installing, the drive plate tab must be placed back on this marked location.

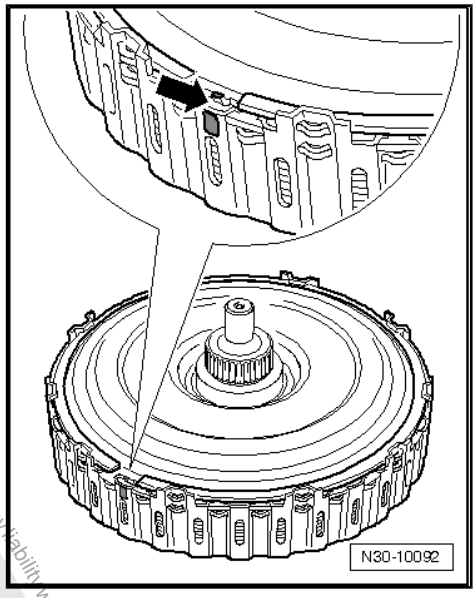

– Insert the Clutch Retaining Bar - T10303- in the position on the clutch end cover as shown.

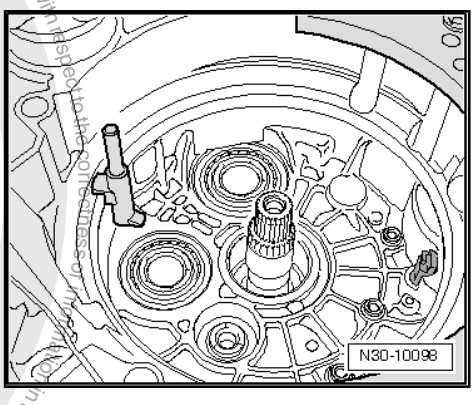

– Set the dual clutch using rotating and lifting movements into the clutch housing, but do not let it fall in. Press the drive plate into the outer clutch pack carrier with both thumbs in direction of -arrows- to install.

Do not install on clutch. The clutch is inserted with the cover as it was in the packaging.

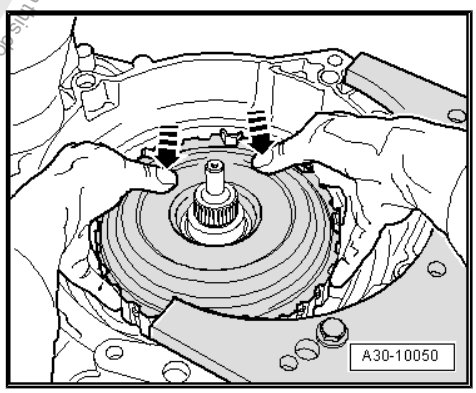

• A second technician should hold the Clutch Retaining Bar - T10303- .

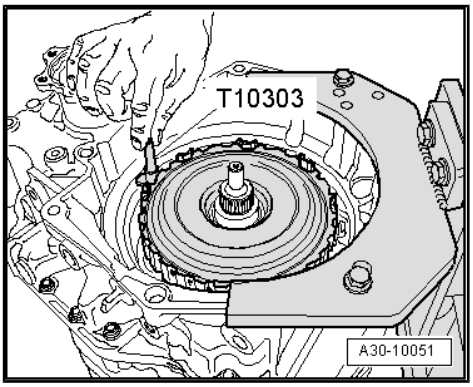

Note

♦ *The retaining pin remains there until clutch end cover is installed.*

♦ *The dual clutch must not be turned any more now, otherwise the Clutch Retaining Bar - T10303- could be twisted in its position.*

Protected by copyright. Copyright by Volkswagen AG. Volkswagen AG does not guarantee or accept any liability with respect to the correctness of information in this document. Copyright by Volkswagen AG.

– Remove and dispose of the old locking ring -2- using a screwdriver -1- in direction of -arrow-.

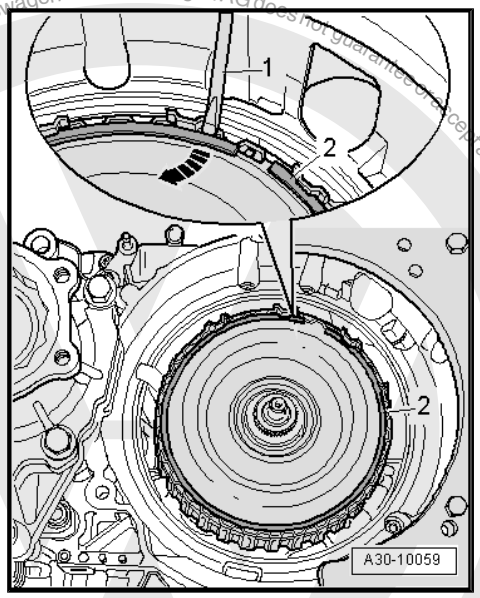

Caution

Do not remove or lift the inner clutch plate carrier, under any circumstances. The clutch plates could rotate themselves.

– Remove the drive plate from the installed clutch in direction of -arrows-, if necessary, use a screwdriver to carefully pry it out of the teeth of the outer clutch plate carrier.

– Move the drive plate to the side.

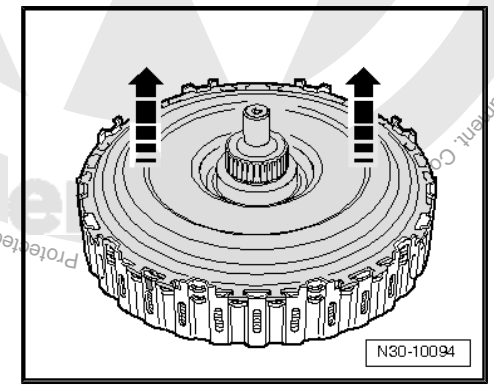

Identifying the Circlip for the Dual Clutch.

– Select the 2 mm thick ring from the circlips delivered and install it -arrow-.

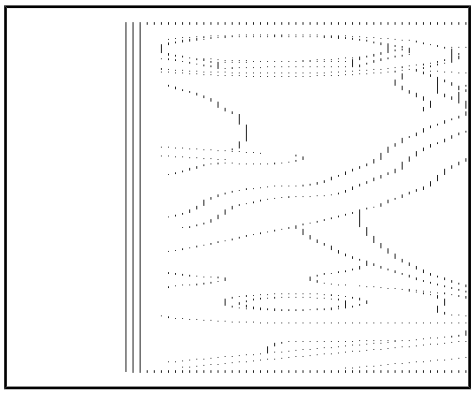

Note

For the initial measurement, temporarily insert 2 mm thick circlip. After the measurement has been determined, replace it with the final circlip.

First Measurement

- The Clutch Retaining Bar - T10303- remains installed.

– Install the Dial Gauge Holder - VW387- on the transmission flange.

Protected by copyright. Copying for private or commercial purposes, in part or in whole, is not permitted unless authorised by Volkswagen AG. Volkswagen AG does not guarantee or accept any liability with respect to the correctness of information in this document.

– Place the -dial gauge test probe- on the input shaft.

– Set the -dial gauge- to “0” with 2 mm pretension.

– Raise the dual clutch up as far as the stop and note the measurement result.

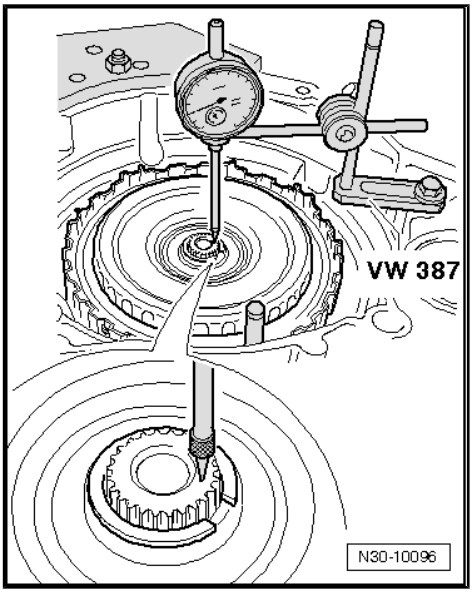

Second Measurement

- The Clutch Retaining Bar - T10303- remains installed.

– Place the dial gauge test probe on the -inner clutch plate carrier hub-.

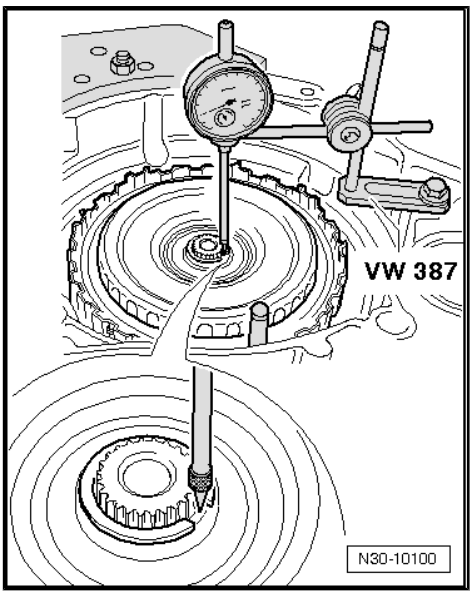

Note

Do not place the dial gauge test probe on the circlip.

– Set the -dial gauge- to “0” again with 2 mm pretension.

– Raise the dual clutch up as far as the stop again and note this measurement as well

Now the Calculation Will Be Made to Determine Which of the Remaining Nine Circlips Will Be Finally Installed:

– Use this formula:

2nd measurment value - 1st measurment value + 1.85 mm = circlip thickness

– Note the result.

The remaining nine circlips are staggered in 0.1 mm increments.

– Measure all the circlips and determine the one that is the closest match to the result.

Determined Measurement for the New Circlip	New Circlip
2.27 mm	2.3 mm
2.24 mm	2.2 mm

Note

If the measurement determined for the new circlip is 2 mm, the circlip that was inserted temporarily remains installed.

Copyright by Volkswagen AG. Volkswagen AG does not guarantee or accept any liability with respect to the correctness of information in this document. Copying for private or commercial purposes, in part or in whole, is not permitted unless authorised by Volkswagen AG.

– Remove the 2 mm circlip and replace it with the circlip that was measured.

– Dispose of all other remaining circlips and the 2 millimeter thick circlip.

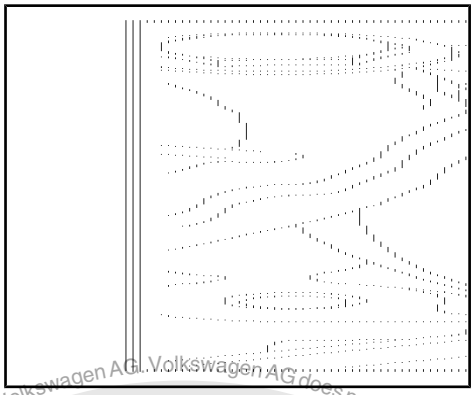

Note

Circlips must only be installed one time.

– Insert the pump shaft by lifting the pump shaft and turning it slightly -arrow- so that it slides all the way into the splines.

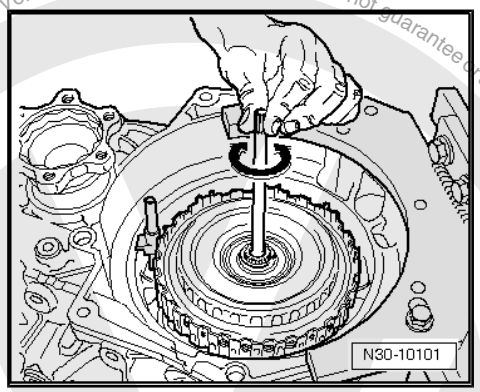

– Insert the drive plate into the dual clutch.

• The protruding tab on the drive plate -arrow- must be installed between the marked teeth or the marking applied to the outer clutch plate carrier.

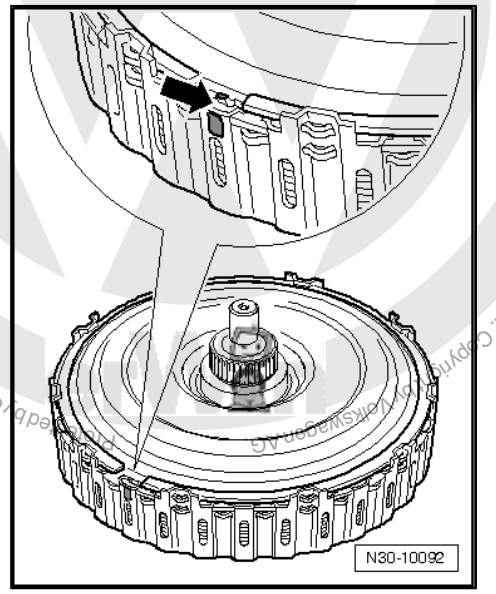

– Install the »new« drive plate circlip.

• The circlip must be installed so that the tab of the drive plate and the color-marked teeth of the outer clutch pack carrier are positioned between both ends of the circlip.

• The circlip must be completely engaged.

– Check the exact installation position of the circlip and that the circlip is engaged using a screwdriver.

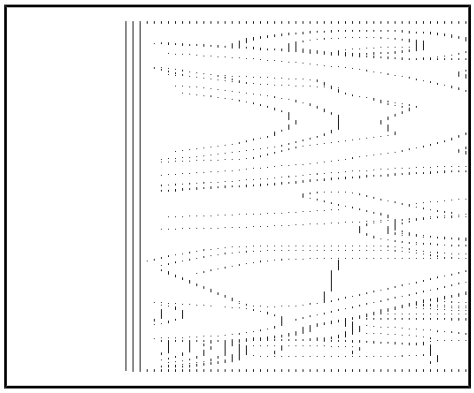

Volkswagen AG. Volkswagen AG does not guarantee or accept any liability with respect to the correctness of information in this document. Copyright by Volkswagen AG. Copying for private or commercial purposes, in part or in whole, is not permitted unless authorised by Volkswagen AG. Copyright by Volkswagen AG

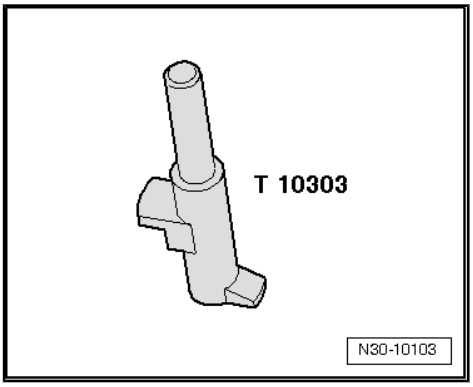

– Now remove the Clutch Retaining Bar - T10303- between the dual clutch and the housing.

– Install the clutch end cover. Refer to
⇒ “2.2 Clutch End Cover, Installing”, page 20 .

When the Installation Is Completed, the Clutch Is Adjusted Correctly.

– Install the transmission. Refer to
⇒ “6.2 Transmission, Installing”, page 97 or
⇒ “7.4 Transmission, Installing, Jetta MY 11, 2.0L 147 kW Gasoline Engine”, page 127 .

– Fill with transmission fluid. Refer to
⇒ “9.3 Fluid, Draining and Filling”, page 136 .

– After installing the transmission, perform the `basic setting` using the `Guided Functions` using the Vehicle Diagnostic Tester .

Protected by copyright. Copying for private or commercial purposes, in part or in whole, is not permitted unless authorised by Volkswagen AG. Volkswagen AG does not guarantee or accept any liability with respect to the correctness of information in this document. Copyright by Volkswagen AG.

3 Special Tools

Special tools and workshop equipment required

- Clutch Cover Plate Guide Sleeve - T10302-

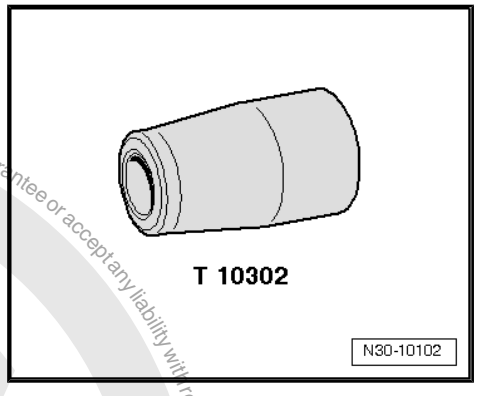

- Clutch Retaining Bar - T10303-

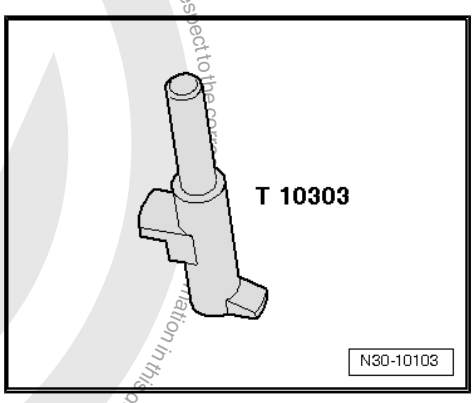

Protected by copyright. Copying for private or commercial purposes, in part or in whole, is not permitted unless authorised by Volkswagen AG. Volkswagen AG does not guarantee or accept any liability with respect to the correctness of information in this document. Copyright by Volkswagen AG.

34 – Controls, Housing

1 Electrical and Electronic Components, Component Locations in DSG® Transmission

The electric/electronic components are located inside the transmission.

The Selector Lever Sensor System Control Module - J587- and the Shift Lock Solenoid - N110- are located on the selector lever.

1 - DSG Transmission Mechatronic - J743-

- ❑ Behind the »large« metal cover
- ❑ Removing and installing with transmission installed. Refer to ⇒ “1.1 DSG Transmission Mechatronic J743 , Removing and Installing, Transmission Installed”, page 34 .
- ❑ Removing and installing with transmission removed. Refer to ⇒ “1.2 DSG transmission Mechatronic J743 , Removing and Installing, Transmission Removed”, page 45 .

2 - Transmission Input Speed Sensor - G182- and Clutch Oil Temperature Sensor - G509-

- ❑ The DSG Transmission Mechatronic - J743- must be removed first before the sensor can be removed. Refer to ⇒ “1.1 DSG Transmission Mechatronic J743 , Removing and Installing, Transmission Installed”, page 34 .

3 - Selector Lever - E313-

- ❑ For more information on the selector lever. Refer to ⇒ “5 Selector Mechanism”, page 62

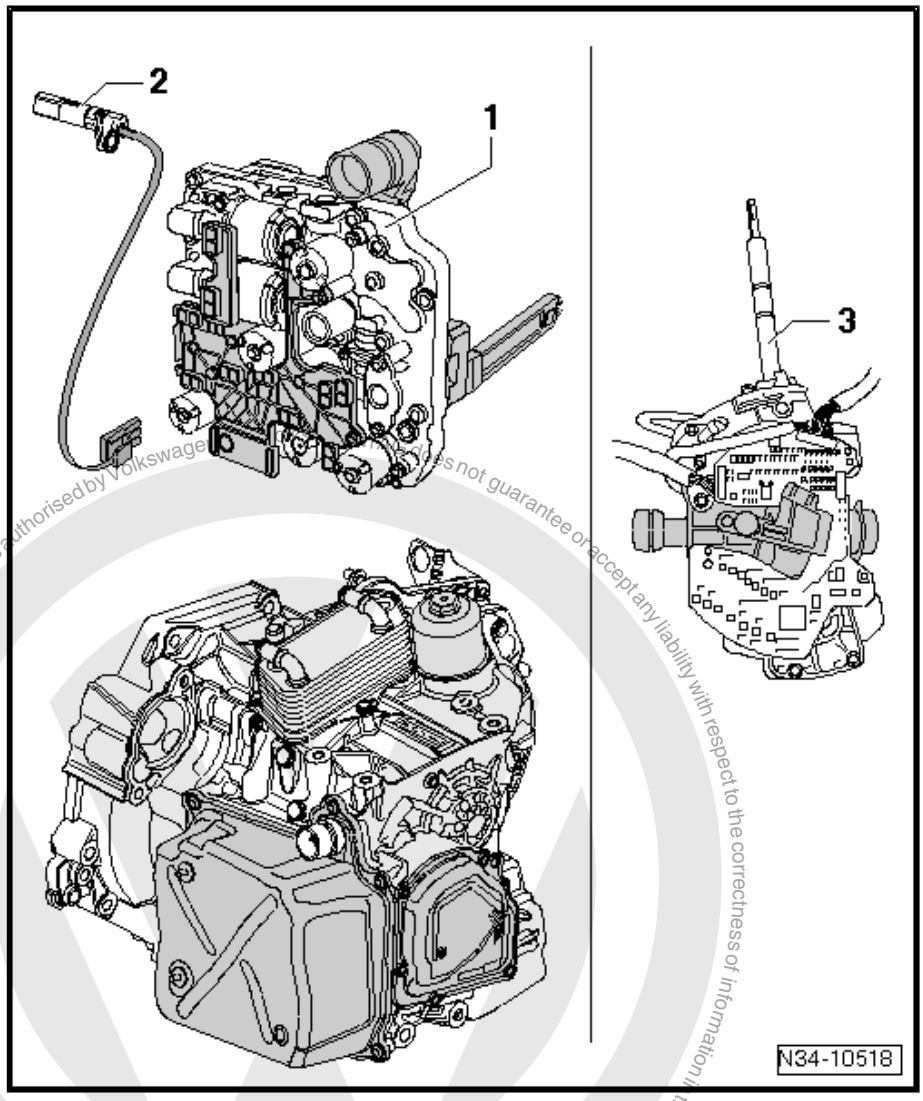

Protected by copyright. Copying for private or commercial purposes, in part or in whole, is not permitted unless authorised by Volkswagen AG. Volkswagen AG does not guarantee or accept any liability with respect to the correctness of information in this document. Copyright by Volkswagen AG.

1.1 DSG Transmission Mechatronic - J743- , Removing and Installing, Transmission Installed

⇒ “1.1.1 Mechatronic, Removing, Transmission Installed”, page 34

⇒ “1.1.2 Mechatronic, Installing, Transmission Installed”, page 39

⇒ “1.2 DSG transmission Mechatronic J743 , Removing and Installing, Transmission Removed”, page 45 .

Special tools and workshop equipment required

- Torque Wrench 1331 5-50Nm - VAG1331-
- Used Oil Collection and Extraction Unit - SMN372500-
- Oil Filler - VAS6262A-
- Speed Sender Release Tool - T10465-

1.1.1 Mechatronic, Removing, Transmission Installed

Always make sure that no dirt or contaminants enter an »open« transmission.

Any dirt that enters can cause transmission failure, especially if the DSG Transmission Mechatronic - J743- and/or the oil pump are »exposed«.

In regard to »contaminated oil«, also observe information on changing the oil filter. Refer to
⇒ “1.5.2 Transmission Fluid Filter, When To Change ”, page 4 .

The Mechatronic can get stuck on the alignment pins when the transmission is very warm. Let the transmission cool down.

– Move the selector lever into “P”.

– Disconnect the battery ground cable. Refer to ⇒ Electrical Equipment; Rep. Gr. 27 ; Battery; Battery, Disconnecting and Connecting .

– Remove the noise insulation. Refer to ⇒ Body Exterior; Rep. Gr. 50 ; Noise Insulation .

If present:

– Remove the connecting hose between the charge air cooler and the charge air pipe. Refer to ⇒ Rep. Gr. 21 ; Charge Air System .

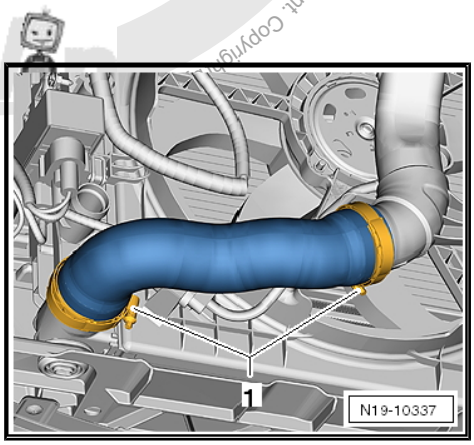

Only on the 1.4L Engine

– Move the lock carrier into the service position. Refer to ⇒ Body Exterior; Rep. Gr. 50 ; Lock Carrier; Service Position .

Continuation for All Vehicles

Note

It is possible that parts, which have nothing to do with the Mechatronic unit, will have to be removed. It depends on the vehicle equipment. Make sure there is enough room around the Mechatronic unit.

Protected by copyright. Copying for private or commercial purposes, in part or in whole, is not permitted unless authorised by Volkswagen AG. Volkswagen AG does not guarantee or accept any liability with respect to the correctness of information in this document. Copyright

- Depending on the vehicle, the parts could be:
- Fan mount -arrow-
- Additional lines for the A/C systems
- Charge or cold air pipes

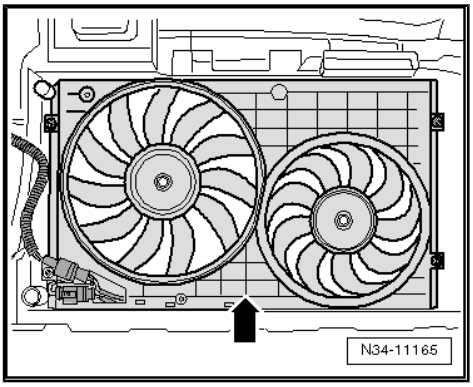

Caution

There is a risk of damaging the DSG Transmission Mechatronic - J743- with static electricity.

- *Do not touch contacts in DSG Transmission Mechatronic - J743- connector with hands.*

– To discharge any static electricity, touch the vehicle ground with hand (without wearing a glove). Refer to ⇒ “1.7 Electrical Components”, page 5 .

– Turn the Mechatronic connector lock -1- »counter-clockwise« to release and disconnect the connector.

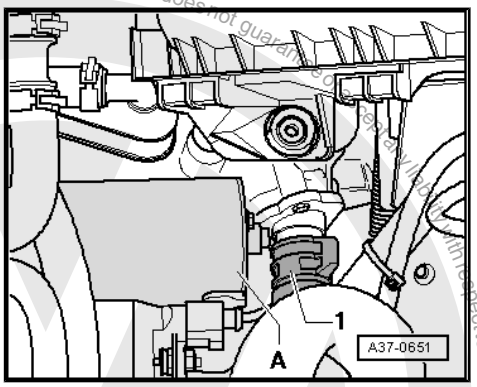

Note

The connector is located on the transmission near the starter -A-.

– Remove the wires and bracket from the front of the transmission cover -arrows- (two M6 nuts).

Tightening Specification for the nuts: 10 Nm

– Position lines in cover area upward and tie up.

– Place the Used Oil Collection and Extraction Unit - SMN372500- under the transmission near the »large« cover.

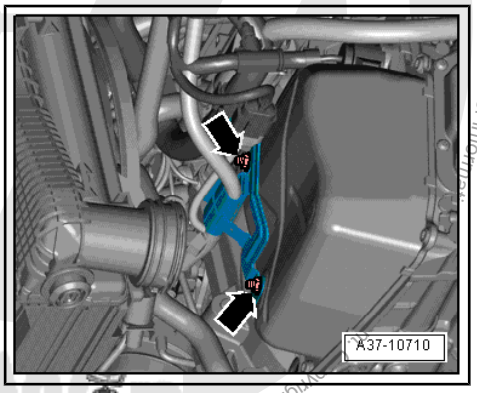

Caution

Fluid will leak out of the cover when the bolts are removed. Risk of injury due to hot transmission fluid.

– Loosen bolts on the transmission cover -arrows- diagonally first and then remove them. Hold the cover in place at the same time.

– Drain the gear oil and remove the cover and seal.

Approximately three liters (3.1 quarts) of transmission fluid will drain out.

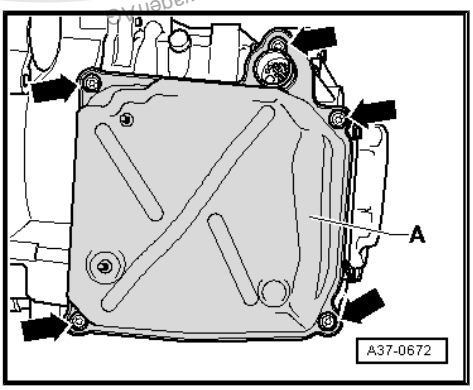

Note

Always replace the »small« oil pump cover, the seal and the bolts on the transmission cover.

Protected by copyright. Copying for private or commercial purposes, in part or in whole, is not permitted unless authorised by Volkswagen AG. Volkswagen AG does not guarantee or accept any liability with respect to the correctness of information.

– Remove the oil pump cover -A-.

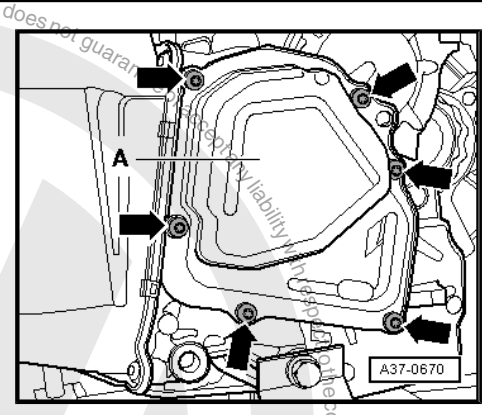

– Remove the bolts -2 and 3- from the transmission pendulum support. Refer to ➤ Rep. Gr. 10 .

The transmission can now be »pressed down« slightly to remove the Mechatronic.

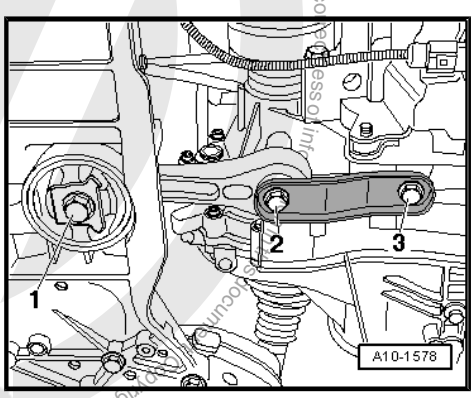

Before handling the Mechatronic, touch a grounded object again. Refer to ⇒ “1.7 Electrical Components”, page 5 .

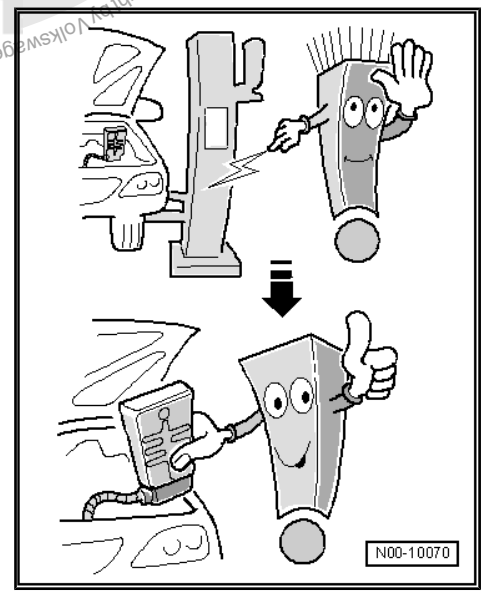

– Release the connector -1- of the Transmission Input Speed Sensor - G182- and Clutch Oil Temperature Sensor - G509- using the Speed Sensor Release Tool - T10465- .

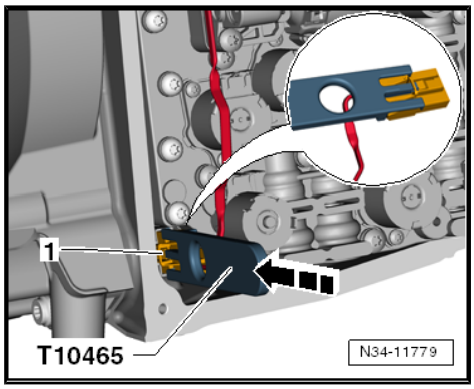

Protected by copyright. Copying for private or commercial purposes, in part or in whole, is not permitted unless authorised by Volkswagen AG. Volkswagen AG does not guarantee or accept any liability with respect to the correctness of information in this document.

Protected by copyright. Copying for private or commercial purposes, in part or in whole, is not permitted unless authorized by Volkswagen AG. Volkswagen AG does not guarantee the accuracy and completeness of this information. Copyright by Volkswagen AG.

Note

- *If the Speed Sender Release Tool - T10465- is not available, the connector can be removed by carefully using two screwdrivers as follows:*
- *Press only on the release with the screwdriver -1-. Do not use a screwdriver as a lever.*
- *Loosen the connector with the screwdriver -2-.*
- *Be very careful. The connector locking mechanisms can break. Replace the sensor if this happens.*

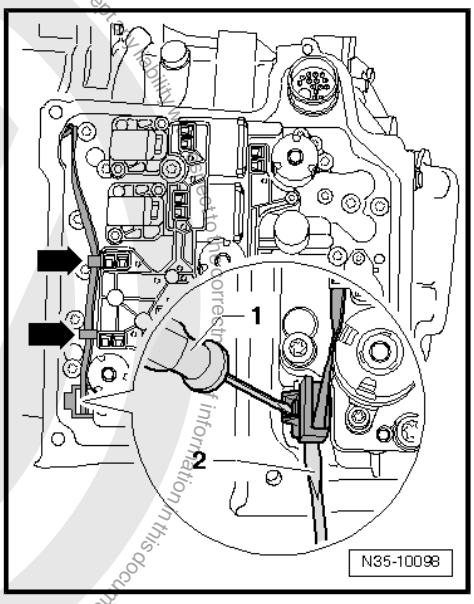

Do Not Pull On the Wire

– Disconnect the connector.

– First remove line from the lower clamp -arrow I-.

– Then remove from the second clamp -arrow II- and move it to the side. Do not kink line.

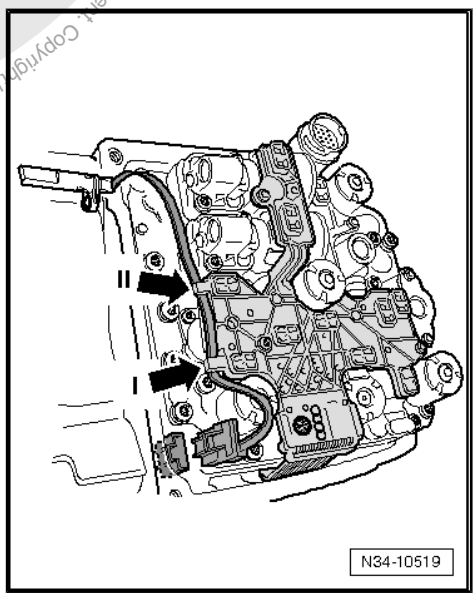

– Loosen and remove the bolts -1 through 10- in the specified sequence.

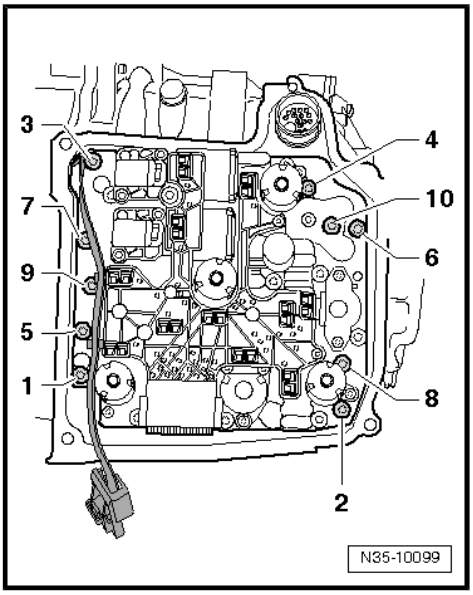

– Carefully pull the Mechatronic out of the transmission housing until the sensor arm -B- on rear side is no longer located in transmission housing.

When handling the Mechatronic, be particularly aware of the »long« sensor arm -B-.

– Carefully move the DSG Transmission Mechatronic - J743- downward.

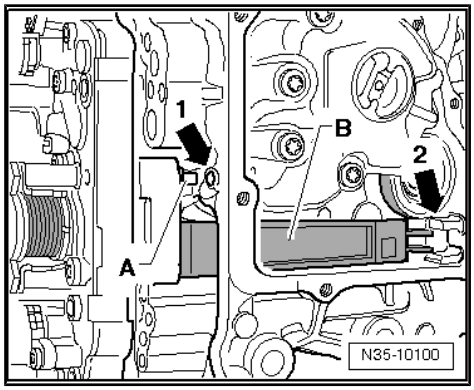

Store the Mechatronic Properly

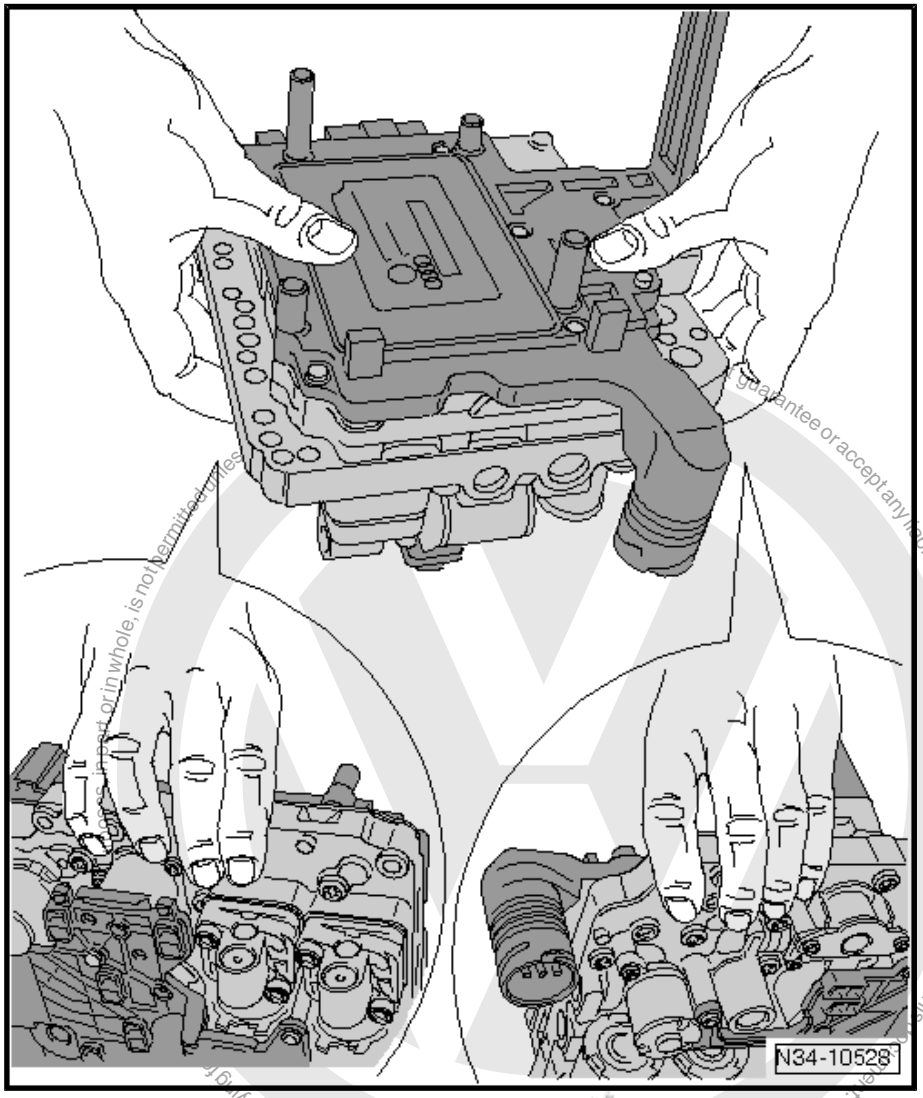

Protected by copyright. Copyright by Volkswagen AG.

Caution

Never lift the Mechatronic by the »sensor arm« and never let it rest on the arm.

Replace the Mechatronic if the »arm« Gets Damaged.

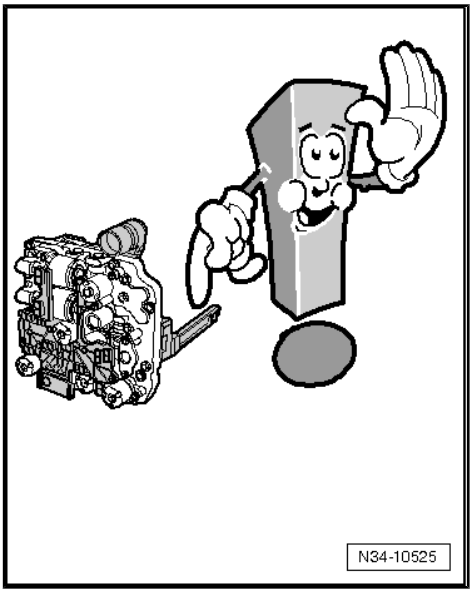

1.1.2 Mechatronic, Installing, Transmission Installed

Before handling the Mechatronic, touch a grounded object again.
Refer to ⇒ “1.7 Electrical Components”, page 5 .

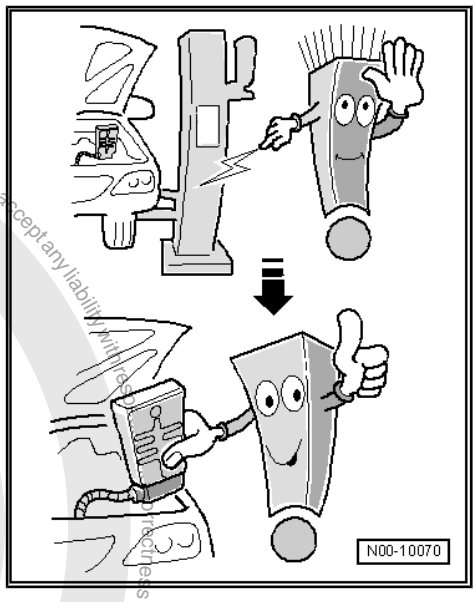

Protected by copyright. Copying for private or commercial purposes, in part or in whole, is not permitted unless authorised by Volkswagen AG. Volkswagen AG does not guarantee or accept any liability with respect to the correctness of information in this document. Copyright by Volkswagen AG.

Protected by copyright. Copyright by Volkswagen AG. Volkswagen AG does not guarantee or accept any liability with respect to the correctness of information in this document. Copying for private or commercial purposes, in part or in whole, is not permitted unless authorized by Volkswagen AG.

Replace the Mechatronic if the »arm« Gets Damaged.

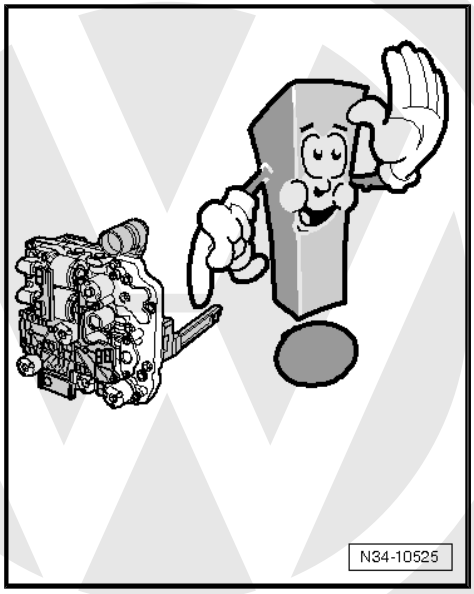

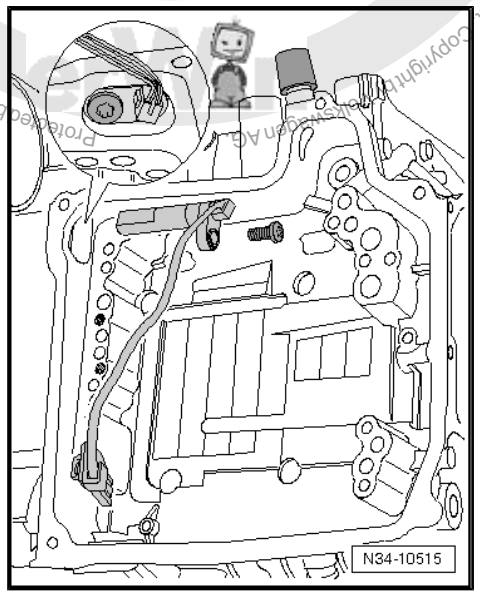

Note

- *The DSG Transmission Mechatronic - J743- and the transmission must be the same temperature. Otherwise the alignment pins will not »clamp« during installation.*
- *Make sure the Transmission Input Speed Sensor - G182- and the Clutch Oil Temperature Sensor - G509- are installed before installing the Mechatronic.*
- *Do not pinch the line.*

– Carefully mount the Mechatronic onto the alignment pins -arrow-. The goal is for the »sensor arm« to be in its -installation position-.

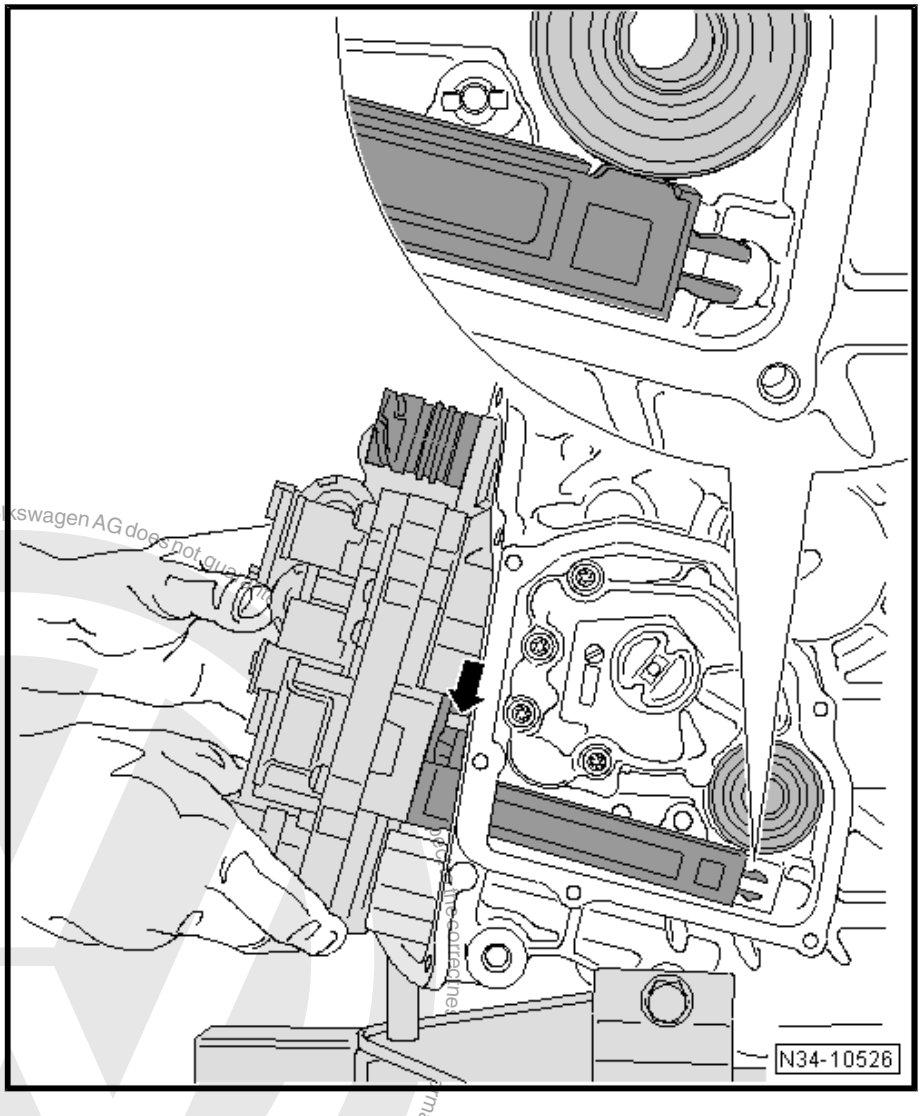

- Hold the Mechatronic facing up. The sensor arm must not touch the sensor wheel. -Detail-
- Make sure the Mechatronic unit is installed correctly.
- Install the new bolts -1 through 10- hand-tight.
- Tighten the bolts to 5 Nm + 90° (1/4 turn) in the specified sequence.
- Engage the wire -A- first into the upper and then the lower tab -arrows-.
- Connect the connector.

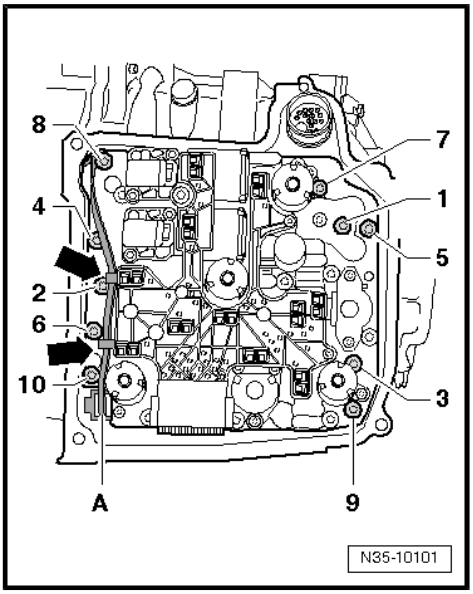

Protected by copyright. Copying for private or commercial purposes, in part or in whole, is not permitted unless authorised by Volkswagen AG. Volkswagen AG does not guarantee the correctness of information in this document. Copyright by Volkswagen AG.

– Replace both -O-rings- if installing the »old« Mechatronic.
– Coat the O-rings with DSG® transmission fluid.

A »new« Mechatronic already has »new« O-rings.

– Replace the transmission cover gasket.
– Clean the sealing surface on the transmission.
– Make sure the seal fits correctly.

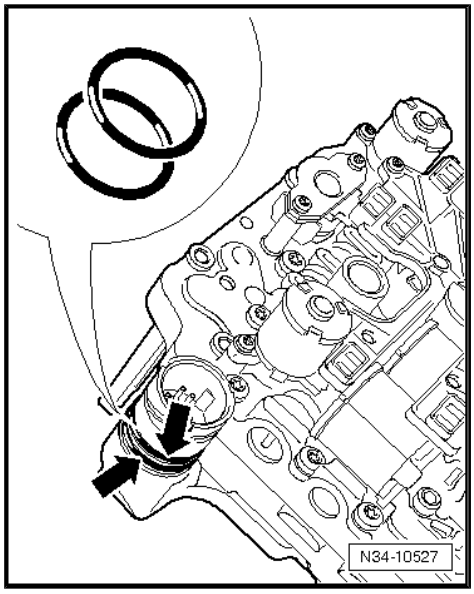

– Place the transmission cover -A- over the Mechatronic. Be careful not to pinch any wires when doing this.
– Install new bolts -arrows- and tighten to 10 Nm diagonally and in several steps.

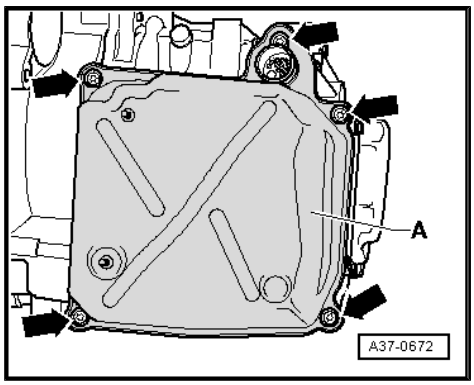

– Attach the cable bracket to the transmission cover and tighten the nuts -arrows- to 10 Nm.

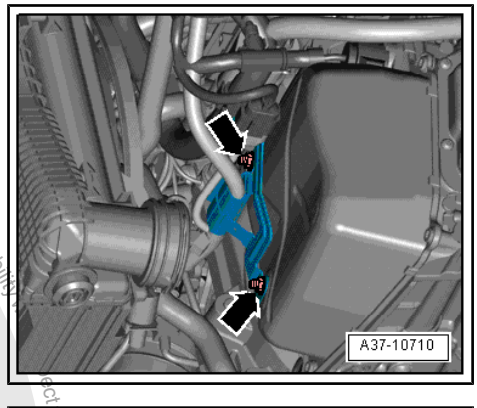

– Set the new oil pump cover -A- in place and tighten the bolts -arrows- in a diagonal sequence to 8 Nm in stages.

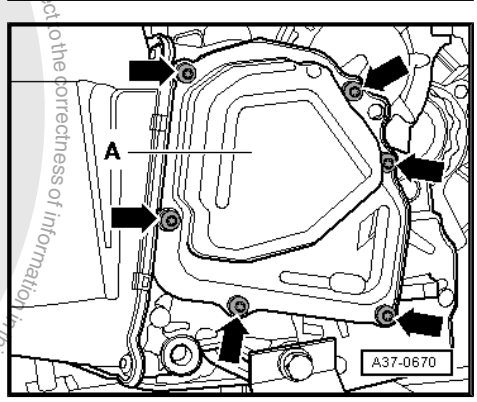

Copyright by Volkswagen AG. Volkswagen AG does not guarantee or accept any liability with respect to the correctness of information in this document. Copyright by Volkswagen AG. Volkswagen AG, is not permitted unless authorised by Volkswagen AG. Copying for private or commercial purposes, in part or in whole, is not permitted unless authorised by copyright.

Protected by copyright. Copying for private or commercial purposes, in part or in whole, is not permitted unless authorised by Volkswagen AG. Volkswagen AG does not guarantee or accept any liability with respect to the correctness of information in this document. Copyright by Volkswagen AG.

Connect the connector -A- from the DSG Transmission Mechatronic - J743- as follows.

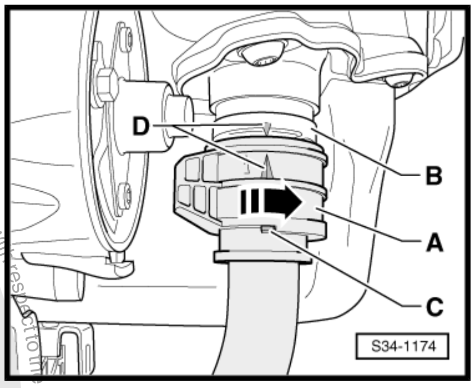

– The arrow -D- on the Mechatronic -B- must line up with the connector -A- as well as with the tab -C-.
– Connect the connector -A- carefully all the way and then turn the lock »clockwise« in the direction of -arrow-.
– Install the hose between the charge air cooler and the charge air pipe, if was removed earlier. Refer to ⇒ Rep. Gr. 21 ; Charge Air System .
– Attach the pendulum support to the transmission using new bolts. Refer to ⇒ Rep. Gr. 10 .
– Reinstall any removed vehicle parts.
– Connect the battery and follow the steps after connecting the battery. Refer to ⇒ Electrical Equipment; Rep. Gr. 27 ; Battery; Battery, Disconnecting and Connecting .

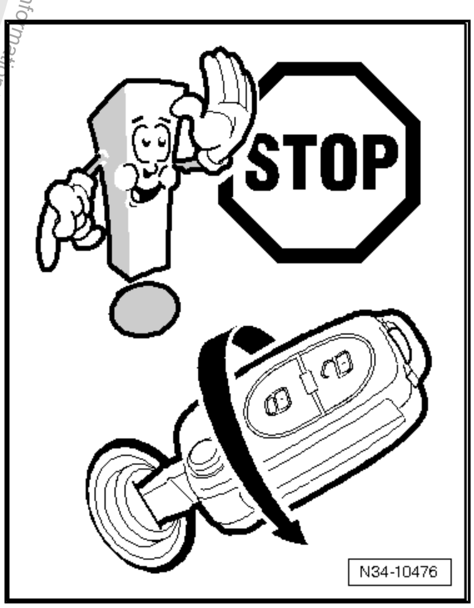

– Do not start the engine.
– Change the filter if the fluid is dirty.
– Replace the DSG® fluid and filter. Refer to ⇒ “9 Transmission Fluid and Transmission Fluid Filter”, page 132 .
– Place the Used Oil Collection and Extraction Unit - SMN372500- under the transmission near the drain plug.

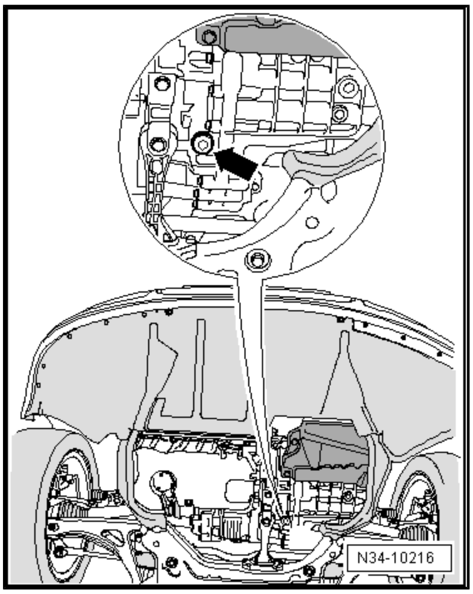

– Remove the drain plug near the pendulum support -arrow-.

– Measure the length of the vent pipe, dimension -a- before installing Oil Filler - VAS6262A- on the oil bottle and shorten the pipe if necessary. Refer to ⇒ page 134 .

Dimension -a- = 210 mm

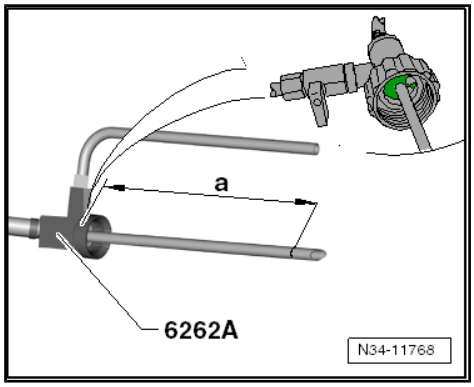

Note

Dimension -a- is measured starting from the shaft (the green surface) on the Oil Filler - VAS6262A- .

– Install the Oil Filler - VAS6262A- into the check hole hand-tight.

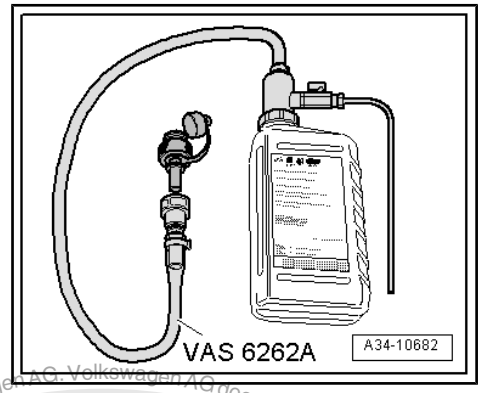

– Shake the bottles before opening.

– Attach the Oil Filler - VAS6262A- to the oil bottle. Be sure to read the instructions. Refer to ⇒ page 133 .

– Fill three (3.1 quarts) liters of fluid.

– To change containers, close the shut-off valve or hold the Oil Filler - VAS6262A- higher than the transmission.

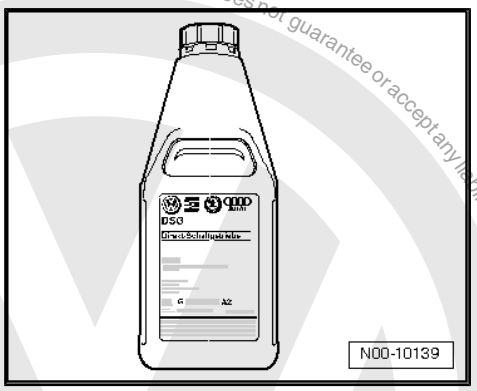

Start the engine and check the fluid level. The Oil Filler - VAS6262A- remains installed.

– Check the fluid level and fill if necessary. Refer to ⇒ “9.2 Fluid Level, Checking and Filling”, page 133 .

– Install the noise insulation. Refer to ⇒ Body Exterior; Rep. Gr. 50 ; Noise Insulation .

– Connect the Vehicle Diagnostic Tester .

– Perform a basic setting on the DSG Transmission Mechatronic - J743- .

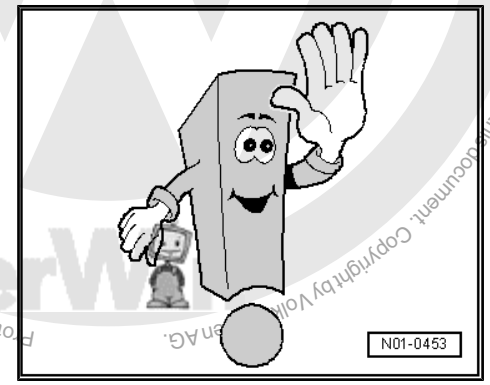

Protected by copyright. Copying for private or commercial purposes, in part or in whole, is not permitted unless authorised by Volkswagen AG. Volkswagen AG does not guarantee or accept any liability with respect to the correctness of information in this document. Copyright by Volkswagen AG.

1.2 DSG transmission Mechatronic - J743- , Removing and Installing, Transmission Removed

⇒ “1.2.1 Mechatronic, Removing, Transmission Removed”, page 45

⇒ “1.2.2 Mechatronic, Installing, Transmission Removed”, page 50

Special tools and workshop equipment required

- Torque Wrench 1331 5-50Nm - VAG1331-
- Used Oil Collection and Extraction Unit - SMN372500-
- Speed Sender Release Tool - T10465-

Always make sure that no dirt or contaminants enter an »open« transmission. Any dirt that enters can cause transmission failure, especially if the DSG Transmission Mechatronic - J743- and/or the oil pump are »exposed«.

In regard to »contaminated oil«, also observe information on changing the oil filter. Refer to
⇒ “1.5.2 Transmission Fluid Filter, When To Change ”, page 4 .

1.2.1 Mechatronic, Removing, Transmission Removed

– Place the Used Oil Collection and Extraction Unit - SMN372500- or Drip Tray under the transmission.

– Remove the bolt -A- near the pendulum support.

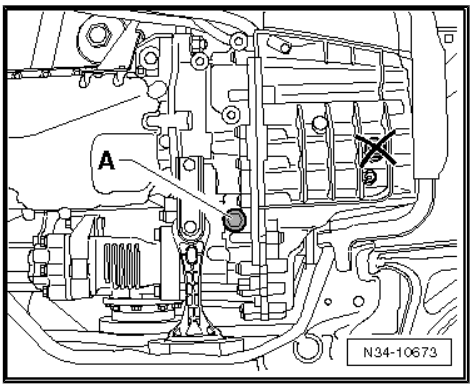

Through transmission production date “09/20/2004”, transmissions were installed with two plugs.

A plastic overflow tube is located in this hole (with 8 mm hex socket head, tightening specification: 3 Nm). Its length determines the fluid level in the transmission.

– Remove the overflow pipe.

– Drain the fluid.

In regard to »contaminated oil«, also observe information on changing the oil filter. Refer to
⇒ “1.5.2 Transmission Fluid Filter, When To Change ”, page 4 .

– Tighten the overflow pipe to 3 Nm.

Protected by copyright. Copying for private or commercial purposes, in part or in whole, is not permitted unless authorised by Volkswagen AG. Volkswagen AG does not guarantee or accept any liability with respect to the correctness of information in this document. Copyright by Volkswagen AG.

– Remove the filter if necessary.

There Are Often Uncertainties As to Whether the Filter Must Be Replaced or Not.

The information on changing the fluid filter can help when making this decision. Refer to
⇒ “1.5.2 Transmission Fluid Filter, When To Change ”, page 4 .

– Insert the new filter with the seat facing downward and tighten the housing to 20 Nm.

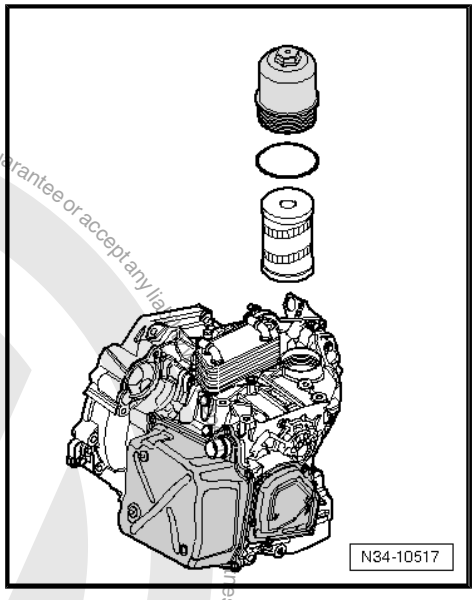

Note

After repairing, the filter does not have to be changed again when filling the fluid.

– Remove the transmission cover and the transmission fluid pump cover.

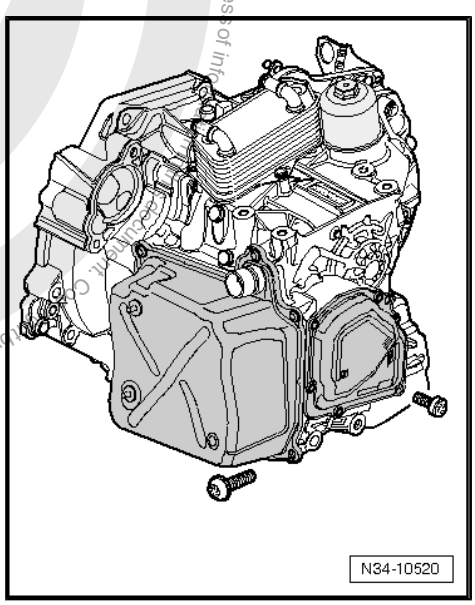

Note

Always replace the transmission fluid pump cover, the bolts for the transmission fluid pump cover as well as the gasket and the transmission cover bolts.

Before handling the Mechatronic, touch a grounded object again.
Refer to ⇒ “1.7 Electrical Components”, page 5 .

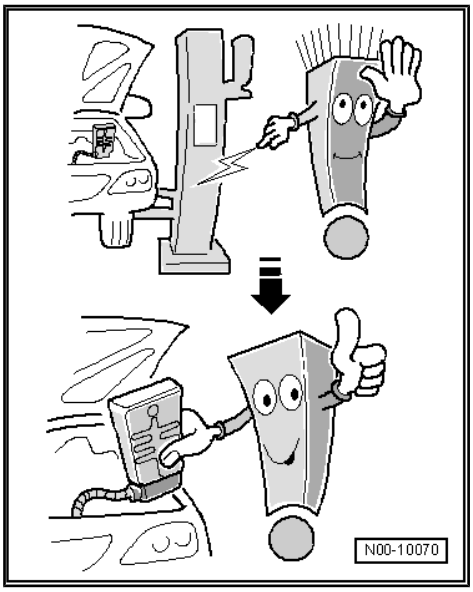

Protected by copyright. Copyright. Volkswagen AG. Volkswagen AG does not guarantee or accept any liability with respect to the correctness of information. Copying for private or commercial purposes, in part or in whole, is not permitted unless authorised by Volkswagen AG.

– Release the connector -1- of the Transmission Input Speed Sensor - G182- and Clutch Oil Temperature Sensor - G509- using the Speed Sensor Release Tool - T10465- .

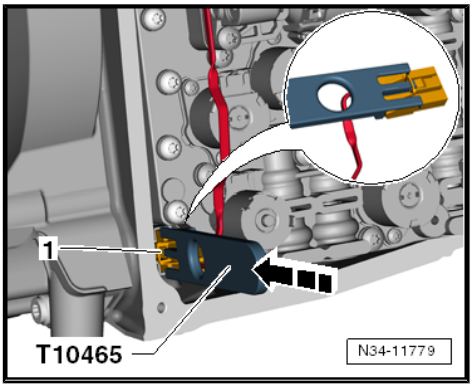

Note

- *If the Speed Sender Release Tool - T10465- is not available, the connector can be removed by carefully using two screwdrivers as follows:*
- *Press only on the release with the screwdriver -1-. Do not use a screwdriver as a lever.*
- *Loosen the connector with the screwdriver -2-.*
- *Be very careful. The connector locking mechanisms can break. Replace the sensor if this happens.*

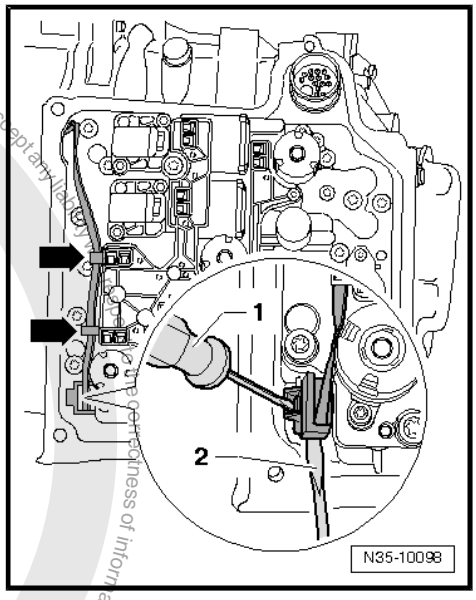

Do Not Pull On the Wire

– Disconnect the connector.

– First remove line from lower clamp -arrow I-.

– Then remove it from the upper clip -arrow II- and move it to the side. Do not kink line.

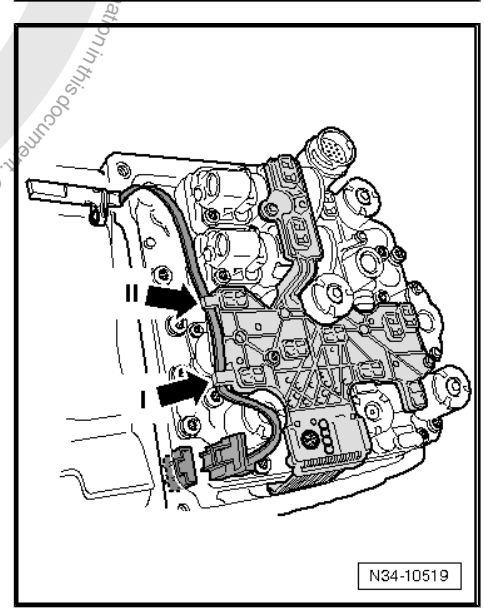

– Remove the bolts -1 through 10- is a diagonal sequence. Start with the bolt -1-.

Protected by copyright. Copying for private or commercial purposes, in part or in whole, is not permitted unless authorised by Volkswagen AG. Volkswagen AG does not guarantee or accept any liability with respect to the correctness of information in this document. Copyright by Volkswagen AG.

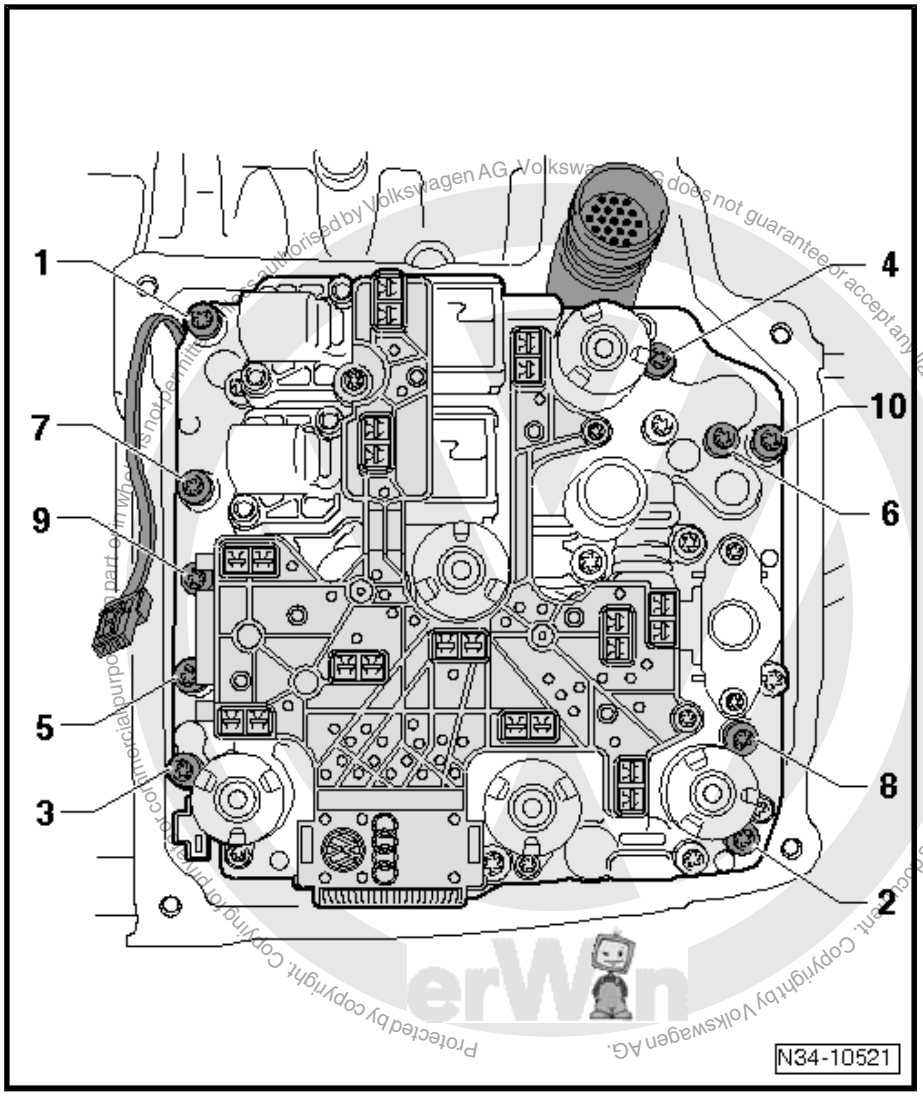

Replace all 10 -bolts-.

– Remove the DSG Transmission Mechatronic - J743- .

When handling the Mechatronic, be particularly aware of the »long« sensor arm.

Caution

Never lift the Mechatronic by the »sensor arm« and never let it rest on the arm.

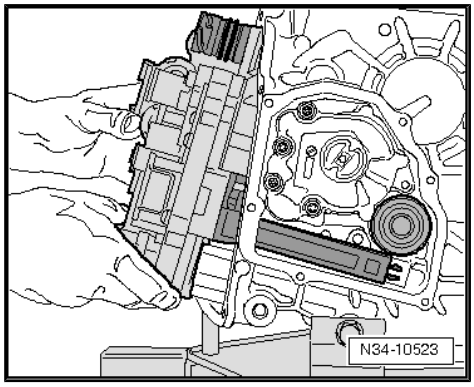

Protected by copyright. Copying for private or commercial purposes, in part or in whole, is not permitted unless authorised by Volkswagen AG. Volkswagen AG does not guarantee or accept any liability with respect to the correctness of information in this document. Copyright by Volkswagen AG.

Replace the Mechatronic if the »arm« Gets Damaged.

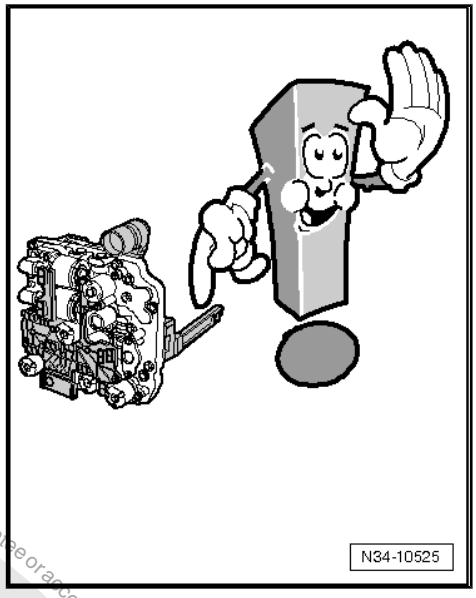

Store the Mechatronic Properly

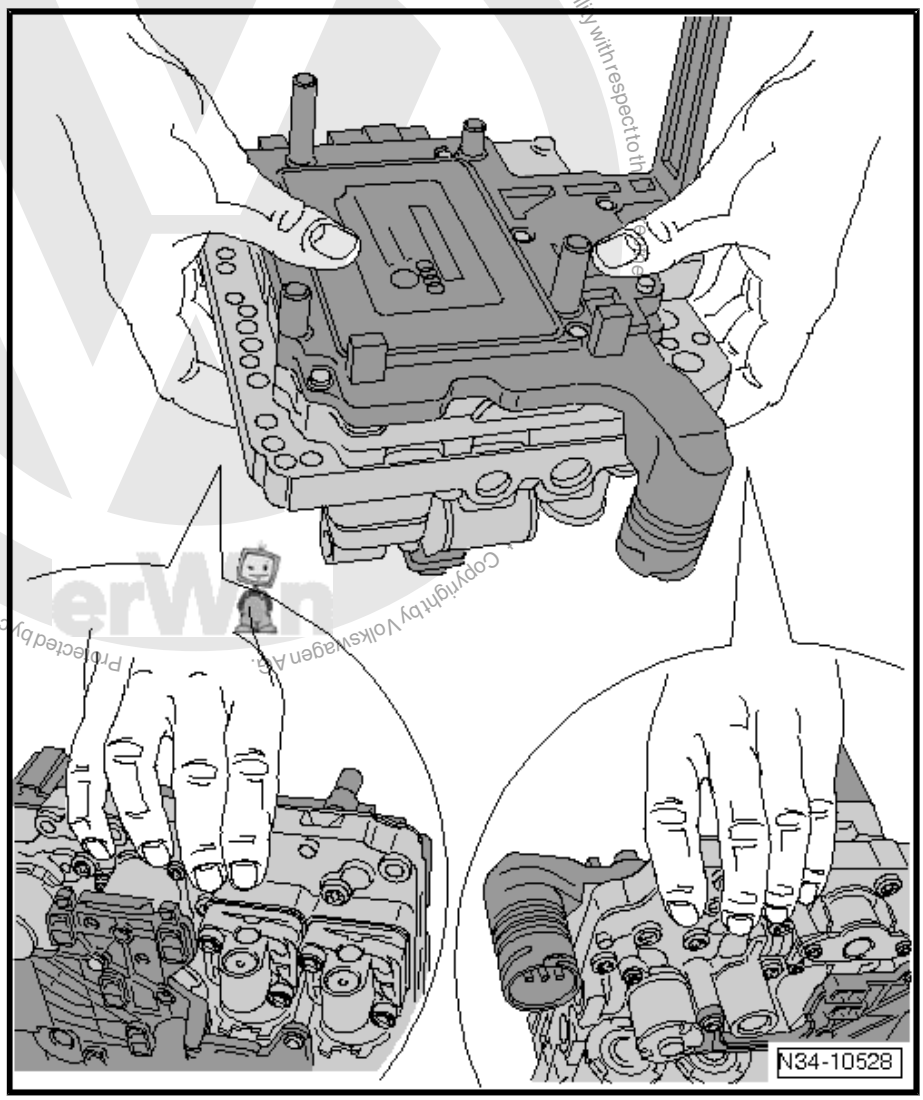

Protected by copyright. Copying for private or commercial purposes, in part or in whole, is not permitted unless authorised by Volkswagen AG. Volkswagen AG does not guarantee or accept any liability with respect to the correctness.
Copyright by Volkswagen AG.

1.2.2 Mechatronic, Installing, Transmission Removed

Caution

Never lift the Mechatronic by the »sensor arm« and never let it rest on the arm.

Replace the Mechatronic if the »arm« Gets Damaged.

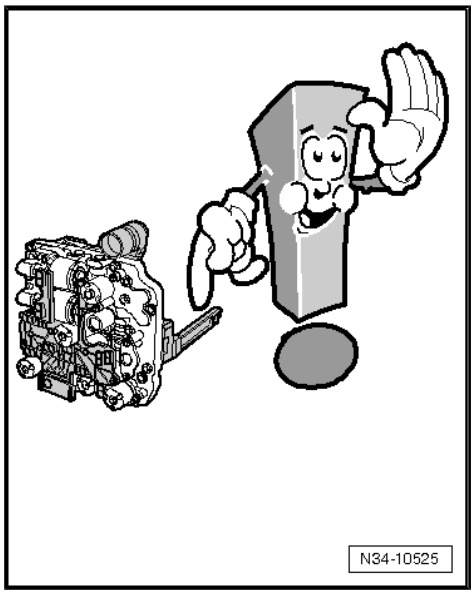

– Make sure the Transmission Input Speed Sensor - G182- and the Clutch Oil Temperature Sensor - G509- are installed.

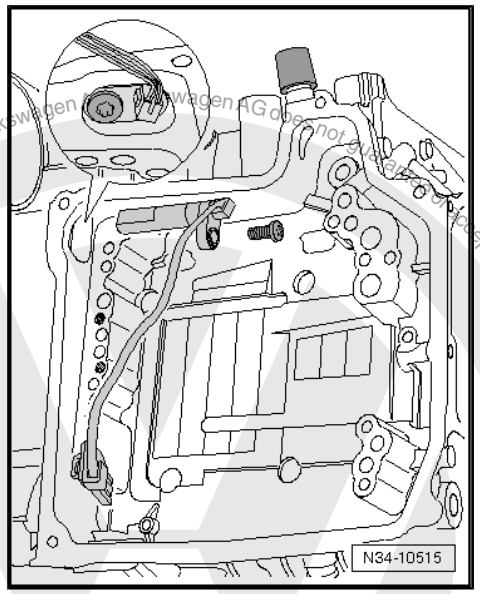

Protected by copyright. Copying for private or commercial purposes, in part or in whole, is not permitted unless authorised by Volkswagen AG. Volkswagen AG does not guarantee or accept any liability with respect to the correctness of information in this document. Copyright by Volkswagen AG.

– Replace both -O-rings- for the Mechatronic connection if an »old« Mechatronic is being re-installed.

A »new« Mechatronic already has »new« rings.

– Coat the O-rings with DSG® transmission fluid.

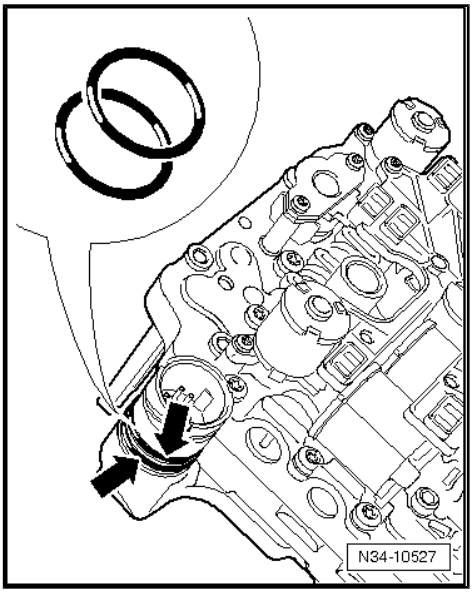

– Carefully place the Mechatronic on the alignment pin -arrow-.
The goal is for the »sensor arm« to be in its
-installation position-.

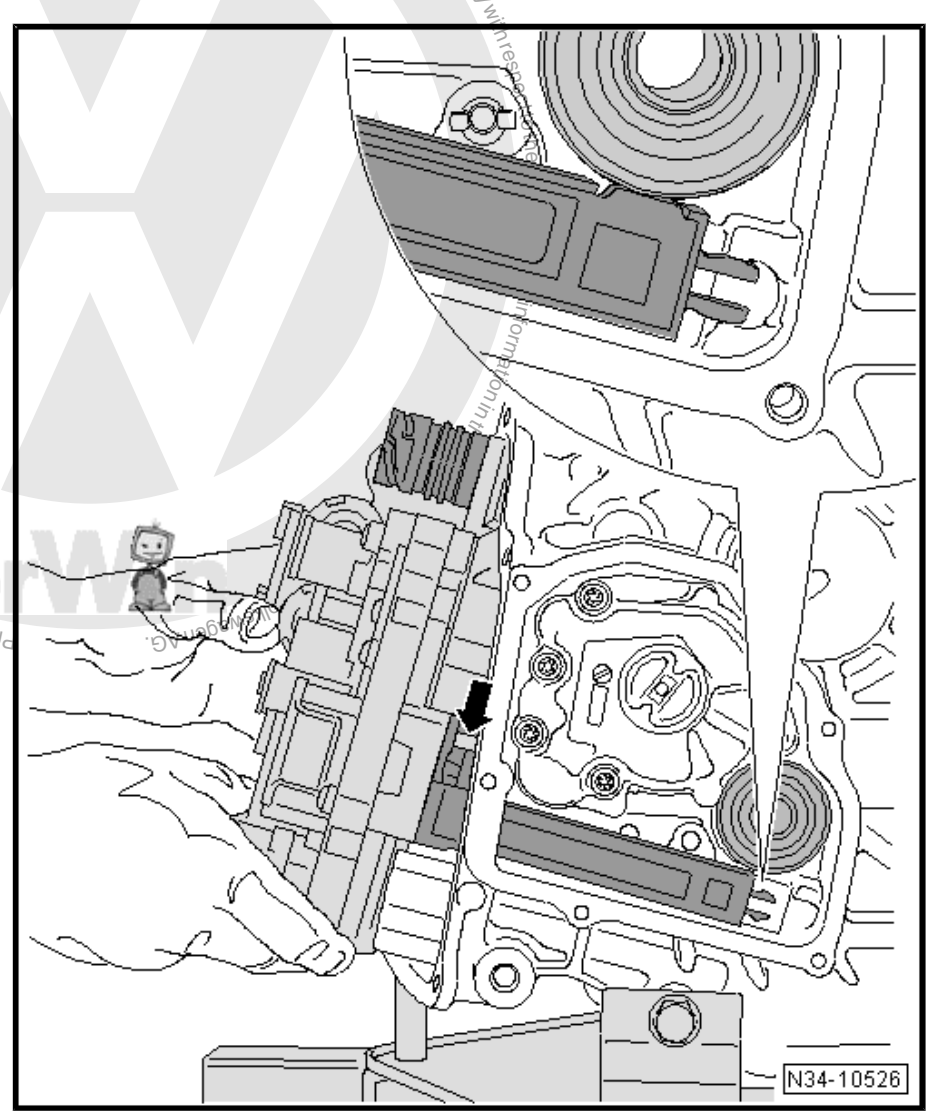

Protected by copyright. Copying for private or commercial purposes, in part or in whole, is not permitted unless authorised by Volkswagen AG. Volkswagen AG does not guarantee or accept any liability with respect to the correctness of information in this repair manual.

– The sensor arm must not touch the sensor wheel. -Detail-
– Do not pinch the line.
– Make sure the Mechatronic unit is installed correctly.

All of the bolts -1 through 10- must be replaced.

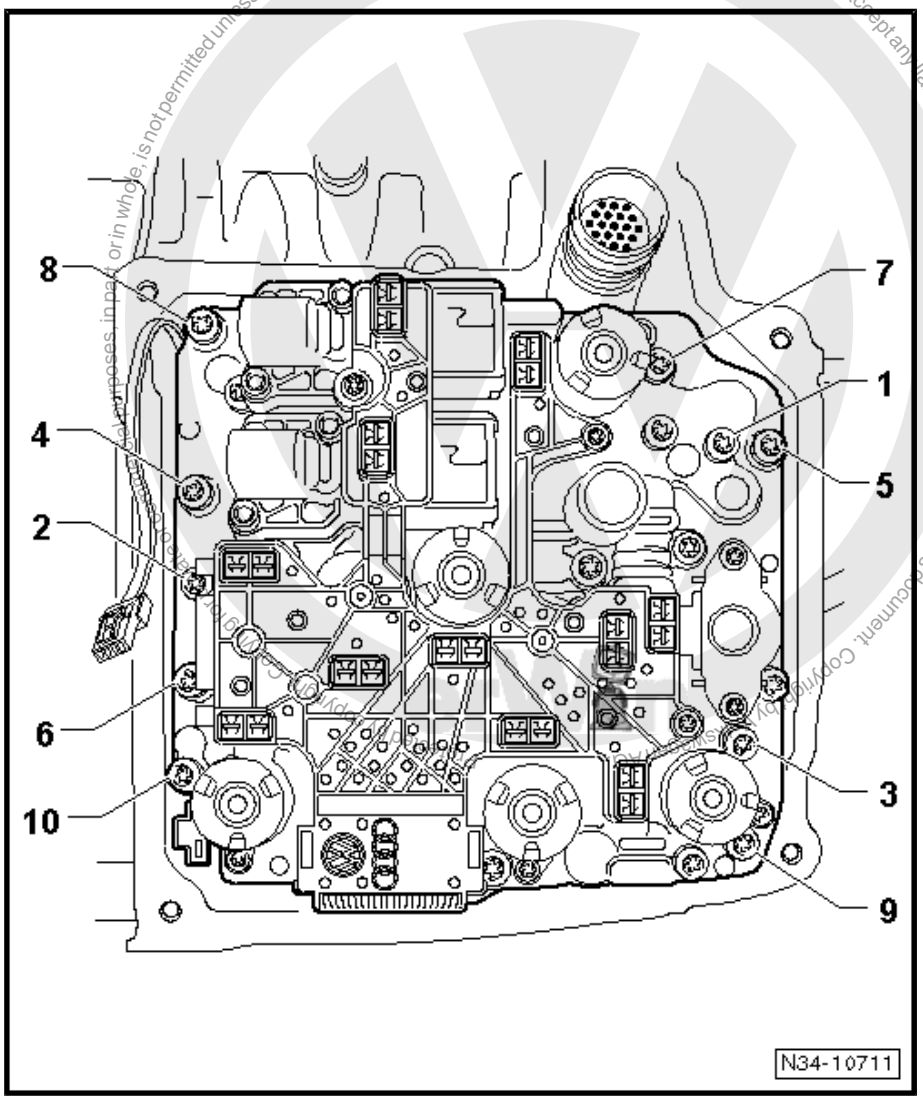

– Install the bolts -1 through 10- »by hand«.
– Tighten all the bolts -1 through 10- in a diagonal sequence to 5 Nm. Then tighten an addition 90° in the same order. Start with the bolt -1-.

Copyright by Volkswagen AG. Volkswagen AG does not guarantee or accept any liability with respect to the correctness of information in this document. Copying for private or commercial purposes, in part or in whole, is not permitted unless authorised by Volkswagen AG.

– Install the Transmission Input Speed Sensor - G182- and Clutch Oil Temperature Sensor - G509- wire in the upper clamp -arrow II- first. Then install them in the lower clip -arrow I-.

– Press the connector onto the Mechatronic.

Always replace the »small« oil pump cover and the bolts for the transmission cover.

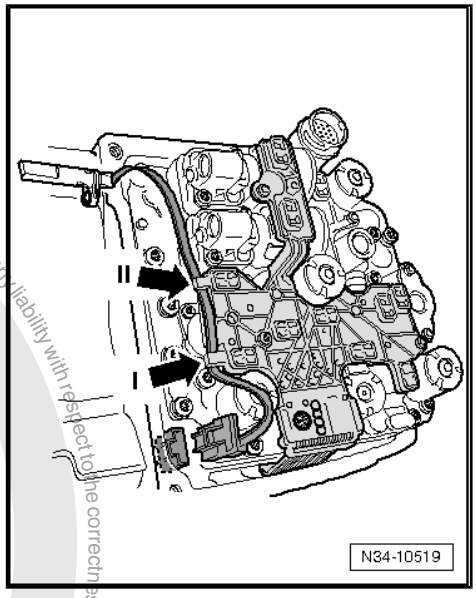

Replace the transmission cover -gasket-.

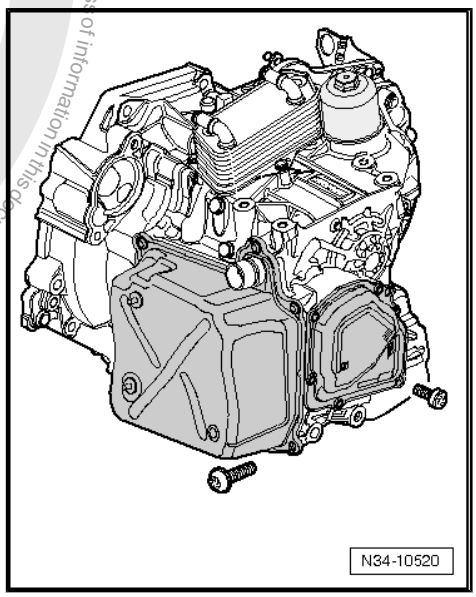

– Fasten bolts -arrows- for the transmission cover -A- »in a diagonal sequence« to 10 Nm.

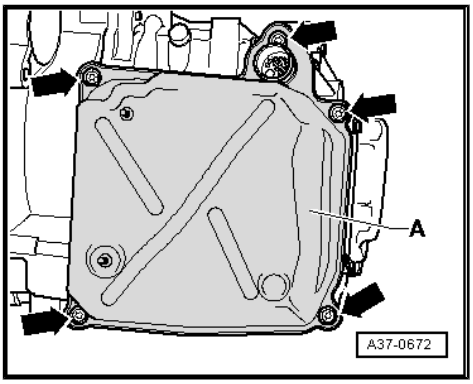

After Installing Transmission

– Fill the fluid without replacing filter. Refer to ⇒ “9 Transmission Fluid and Transmission Fluid Filter”, page 132 .

– Connect the Vehicle Diagnostic Tester .

– Perform a basic setting on the DSG Transmission Mechatronic - J743- .

1.3 Transmission Input Speed Sensor - G182- and Clutch Oil Temperature Sensor - G509- , Removing and Installing

Both sensors are a single component and can only be replaced together. They are »coated with oil« in transmission near the multi-plate clutch. Before removing, the DSG Transmission Mechatronic - J743- must be removed.

Protected by copyright. Copying for private or commercial purposes, in part or in whole, is not permitted unless authorised by Volkswagen AG. Volkswagen AG does not guarantee or accept any liability with respect to the correctness of information in this document. Copyright by Volkswagen AG.

Often, the sensor wire is pulled. It will get damaged. If the wire was pulled, the sensor must be replaced.

Removing

– Remove the DSG Transmission Mechatronic - J743- . Refer to
⇒ “1.1 DSG Transmission Mechatronic J743 , Removing and Installing, Transmission Installed”, page 34 .

Do Not Pull On the Wire

– Remove the bolt and carefully pry out the sensor with screwdriver and/or pliers.

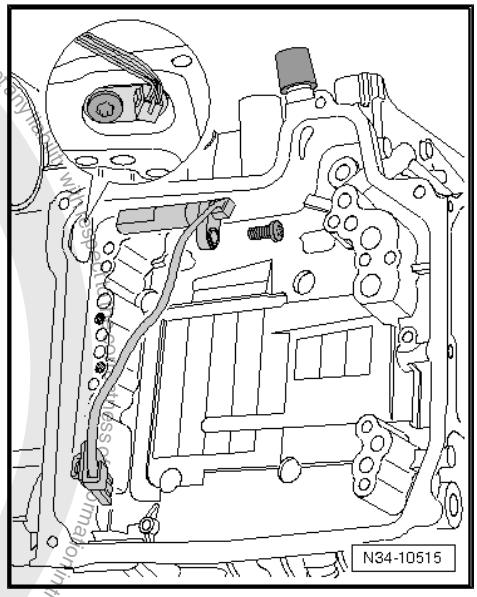

Installing

Install an »old« sensor only if:

- The sensor is working correctly.
- The wire was not pulled out during removal.

If this is not the case, a »new« sensor should be installed.

– Coat the sensor with DSG® transmission fluid and then install it.

– Tighten the bolt to 10 Nm.

– Install the DSG Transmission Mechatronic - J743- . Refer to
⇒ “1.1 DSG Transmission Mechatronic J743 , Removing and Installing, Transmission Installed”, page 34 .

Do not pinch line when installing the Mechatronic!

Protected by copyright. Copyright for private or commercial purposes, in part or in whole is not permitted unless authorised by Volkswagen AG. Volkswagen AG does not guarantee or accept any liability with respect to the correctness of information in this document. Copyright by Volkswagen AG.

2 Transmission Fluid Cooler, Removing and Installing

Removing

Special tools and workshop equipment required

- Hose Clamps - Up To 25mm - 3094-
- Torque Wrench 1331 5-50Nm - VAG1331-
- Engine Bung Set - VAS6122-

– Move the selector lever into “P”.

– Remove the battery and the battery tray. Refer to ⇒ Electrical Equipment; Rep. Gr. 27 ; Battery; Battery, Removing and Installing .

– Place a lint-free cloth on to transmission fluid cooler and transmission to absorb escaping coolant.

Note

- *The cooling system is under pressure when the engine is warm.*
- *Cover the coolant reservoir cap with a cloth and open it carefully before removing the coolant hoses.*

– Disconnect the coolant hoses with Hose Clamps - Up To 25mm - 3094- and remove them from the transmission fluid cooler.

– Seal off the transmission fluid cooler connections with suitable sealing plugs taken from the Engine Bung Set - VAS6122- .

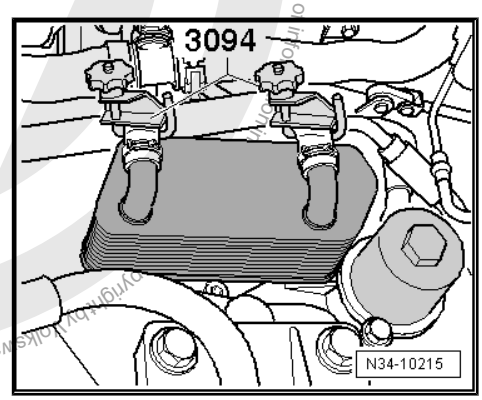

– Remove the bolts -A- and the transmission fluid cooler -B-.

Caution

Coolant must not drip into transmission!

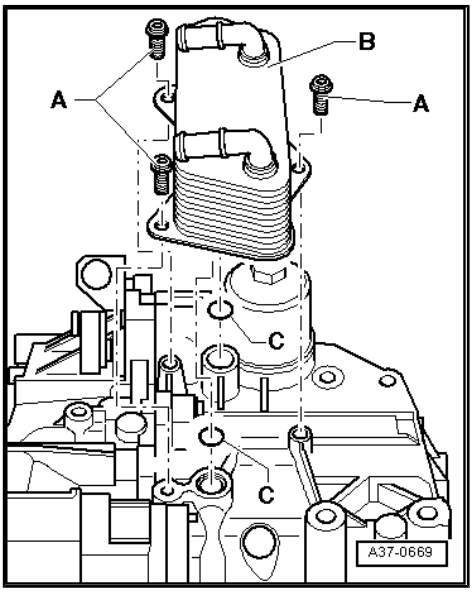

Installing

Protected by copyright. Copying for private or commercial purposes, in part or in whole, is not permitted unless authorised by Volkswagen AG. Volkswagen AG does not guarantee or accept any liability with respect to the correctness of information.
Copyright by Volkswagen AG.

– Replace the O-rings -C- from the transmission fluid cooler -B-.
– Mount the transmission fluid cooler -B-, at the same time, pay attention to the O-rings -C-.
– Tighten the new bolts -A- to 20 Nm + 90° ($^1/_4$ turn).

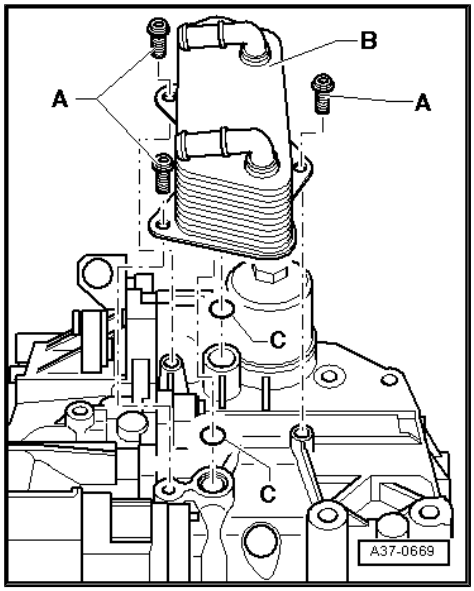

– Attach the coolant hoses to the transmission fluid cooler and remove the Hose Clamps - Up To 25mm - 3094- .
– Install the battery and the battery tray. Refer to ⇒ Electrical Equipment; Rep. Gr. 27 ; Battery; Battery, Removing and Installing .
– Check the coolant level and fill if necessary. Refer to ⇒ Rep. Gr. 19 .
– After repairing, check the transmission fluid level and fill. Refer to ⇒ “9.2 Fluid Level, Checking and Filling”, page 133 .

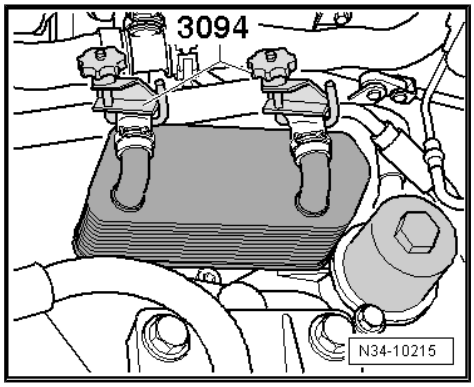

Caution

Do not start engine during coolant level test if the transmission fluid has not been filled yet.

Protected by copyright. Copyright by Volkswagen AG. Volkswagen AG does not guarantee or accept any liability with respect to the correctness of information in this document. Copying for private or commercial purposes, in part or in whole, is not permitted unless authorised by Volkswagen AG.

3 Oil Pump, Removing and Installing

Special tools and workshop equipment required

- Torque Wrench 1331 5-50Nm - VAG1331-
- Used Oil Collection and Extraction Unit - SMN372500-
- Wrench - Pump/Injector Long Reach - T10054- .

Brief Description

The oil pump can be replaced without removing transmission. The vehicle must be raised and any covers installed on bottom of front end must be removed. The control arm to suspension strut connection does not need to be separated. The drive axle also does not have to be removed. “Perform basic calibration” is not needed. Only the DSG® transmission fluid and pump cover have to be replaced.

Removing

– Remove the noise insulation. Refer to ⇒ Body Exterior; Rep. Gr. 50 ; Noise Insulation .

– Remove the lower section of the left wheel housing liner. Refer to ⇒ Body Exterior; Rep. Gr. 66 ; Wheel Housing Liner; Overview - Front Wheel Housing Liner .

– Place the Used Oil Collection and Extraction Unit - SMN372500- under the transmission.

In regard to »contaminated oil«, also observe information on changing the oil filter. Refer to
⇒ “1.5.2 Transmission Fluid Filter, When To Change ”, page 4 .

– Remove the bolt -A- near the pendulum support.

Through transmission production date “09/20/2004”, transmissions were installed with two plugs.

A plastic overflow tube is located in this hole (with 8 mm hex socket head, tightening specification: 3 Nm). Its length determines the fluid level in the transmission.

– Remove the overflow pipe.

– Drain the fluid.

– Tighten the overflow pipe to 3 Nm.

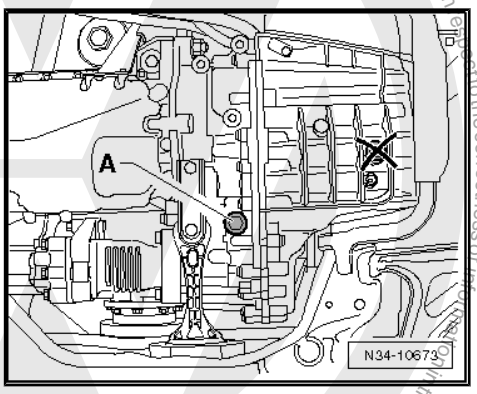

– Replace the bolt seal -arrow-.

– The Used Oil Collection and Extraction Unit - SMN372500- remains under the transmission.

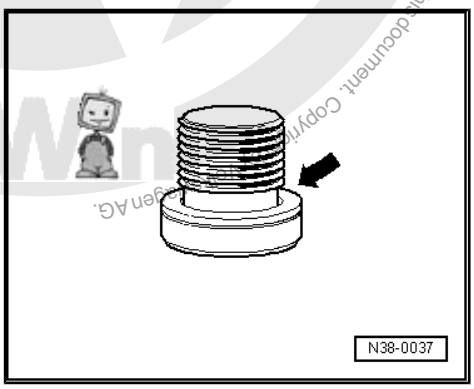

Protected by copyright. Copyright for private or commercial purposes in part or in whole is not permitted unless authorised by Volkswagen AG. Volkswagen AG does not guarantee or accept any liability with respect to the correctness of the information in this document. Copyright by Volkswagen AG.

– Remove the bolts -arrows- and the oil pump cover -A-.

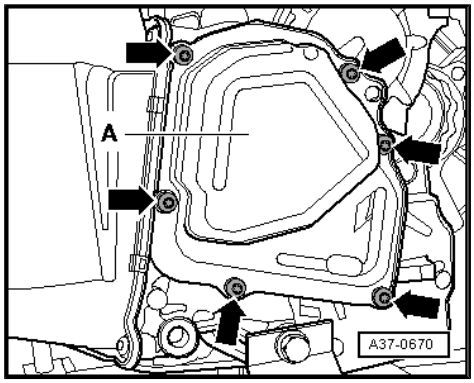

There is Still Oil in Oil Pump Cover

– Remove the bolts -arrows- and the pump -1- from the alignment pins and pull the input shaft from the pump.

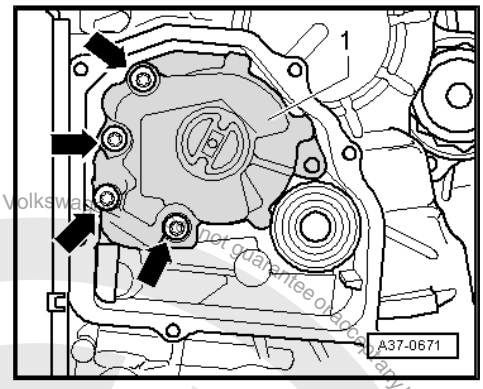

Remove the top bolt with the Wrench - Pump/Injector Long Reach - T10054- .

Installing

– Install the input shaft -A- all the way into the transmission. Turn the input shaft while doing this.

– Always use a new metal seal -B-.

• The two alignment pins -C- must be inside the transmission housing.

– When positioning the oil pump pay attention to driveshaft splines and correct seating on the alignment pins.

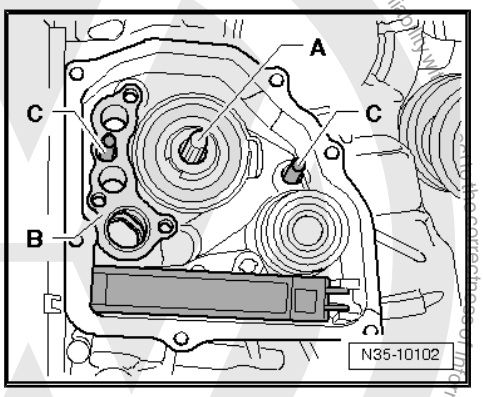

Different Oil Pump Bolts -1-

All four bolts -arrows- with flat heads

Tightening Specification

♦ 5 Nm + 90° ($^1/_4$ turn)

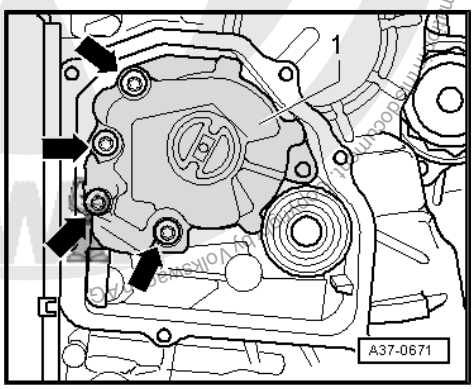

Protected by copyright. Copying for private or commercial purposes, in part or in whole, is not permitted unless authorised by Volkswagen AG. Volkswagen AG does not guarantee or accept any liability with respect to the correctness and completeness of this document.

3 bolts with flat head, top bolt -arrow- with countersunk head

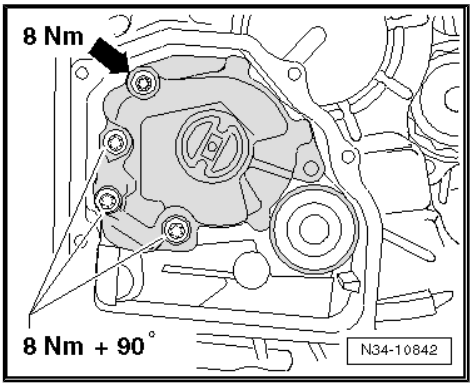

Tightening Specification

- Countersunk bolt: tighten with the Wrench - Pump/Injector Long Reach - T10054- 8 Nm without additional turn
- Flat head bolts: 8 Nm +90° ($^1/_4$ turn)

– Set the new oil pump cover -A- in place and tighten new bolts -arrows- in diagonal sequence and in several steps to 8 Nm.

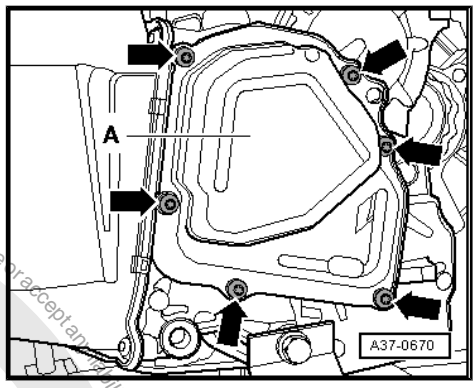

Transmission does not have oil. »New« oil must now be added and adjust to the correct oil level. Refer to
⇒ “9 Transmission Fluid and Transmission Fluid Filter”, page 132 .

– Install the left wheel housing liner. Refer to ⇒ Body Exterior; Rep. Gr. 66 ; Wheel Housing Liner; Overview - Front Wheel Housing Liner .

– Install the noise insulation. Refer to ⇒ Body Exterior; Rep. Gr. 50 ; Noise Insulation .

Protected by copyright. Copying for private or commercial purposes, in part or in whole, is not permitted unless authorised by Volkswagen AG. Volkswagen AG does not guarantee or accept any liability with respect to the correctness of information in this document. Copyright by Volkswagen AG.

4 Selector Shaft Lever Gasket, Replacing

Special tools and workshop equipment required

- ♦ Press Piece - Shift Rod/Alternator - VW423-
- ♦ Puller - Crankshaft/Power Steering Seal - T20143-
- ♦ Torque Wrench 1331 5-50Nm - VAG1331-

– Remove the selector lever cable from the transmission. Refer to
⇒ “5.2 Selector Lever Cable, Removing and Installing, through 02/2009”, page 64 .

– Carefully pry the lever -A- off the selector shaft.

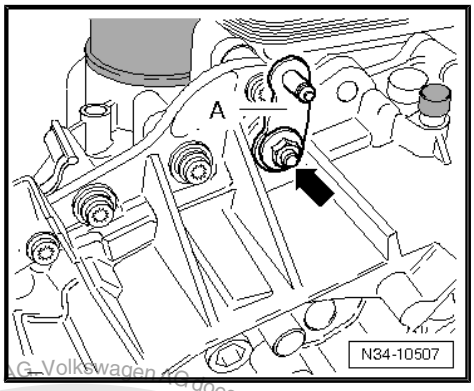

– Pry out the seal in the direction of -arrow-.

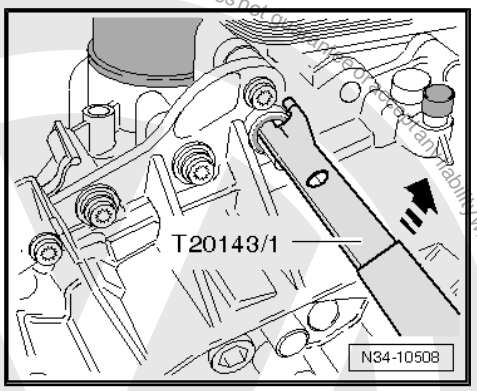

– Fill the space between the sealing/dust lip -arrow- halfway with Sealing Grease - G 052 128 A1- .

– Lightly lubricate the outer edge of the gasket.

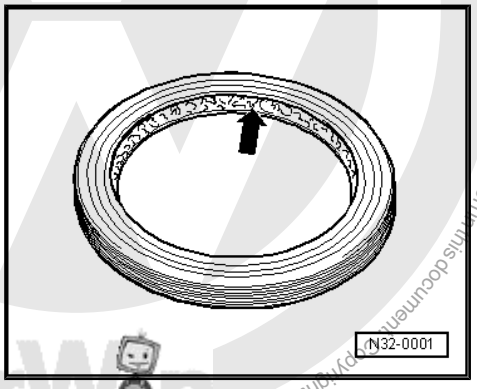

Protected by copyright. Copying for private or commercial purposes, in part or in whole, is not permitted unless authorised by Volkswagen AG. Volkswagen AG does not guarantee or accept any liability with respect to the correctness of information in this document. Copyright by Volkswagen AG.

– Install the new gasket all the way. Do not tilt the gasket when installing it.

• The closed side of the gasket -arrow- points to the Press Piece - Shift Rod/Alternator - VW423- .

– Install the lever and tighten the nut to 20 Nm.

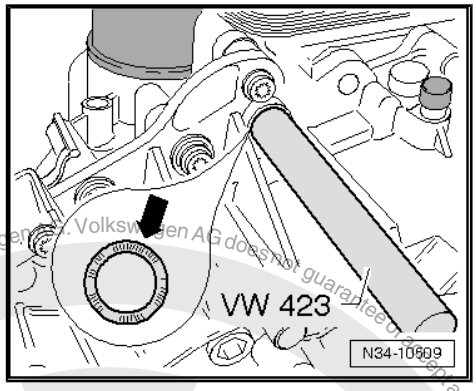

The Selector Shaft Lever Fits on the Splines in One Position Only.

– Attach the selector lever cable to the transmission and adjust. Refer to ⇒ “5.6 Selector Lever Cable, Adjusting”, page 80 .

Protected by copyright. Copying for private or commercial purposes, in part or in whole, is not permitted unless authorised by Volkswagen AG. Volkswagen AG does not guarantee or assume any liability with respect to the correctness of information in this document. Copyright by Volkswagen AG.

5 Selector Mechanism

⇒ “5.1 Overview - Selector Mechanism, Vehicles through 02/2009”, page 62

⇒ “5.2 Selector Lever Cable, Removing and Installing, through 02/2009”, page 64

⇒ “5.3 Overview - Selector Mechanism, Vehicles from 03/2009”, page 72

⇒ “5.4 Selector Mechanism, Removing and Installing, Vehicles from 03/2009”, page 73

⇒ “5.5 Selector Lever Cable, Checking”, page 80

⇒ “5.6 Selector Lever Cable, Adjusting”, page 80

⇒ “5.7 Selector Lever, Emergency Release”, page 82

⇒ “5.8 Selector Lever Handle, Removing and Installing”, page 82

⇒ “5.9 Button in Handle, Moving into Installation Position”, page 85

⇒ “5.10 Selector Mechanism, Checking”, page 86

WARNING

Move the selector lever into “P” and set the parking brake before working with the engine running.

5.1 Overview - Selector Mechanism, Vehicles through 02/2009

Protected by copyright. Copying for private or commercial purposes, in part or in whole, is not permitted unless authorised by Volkswagen AG. Volkswagen AG does not guarantee or accept any liability with respect to the correctness of information in this document. Copyright by Volkswagen AG.

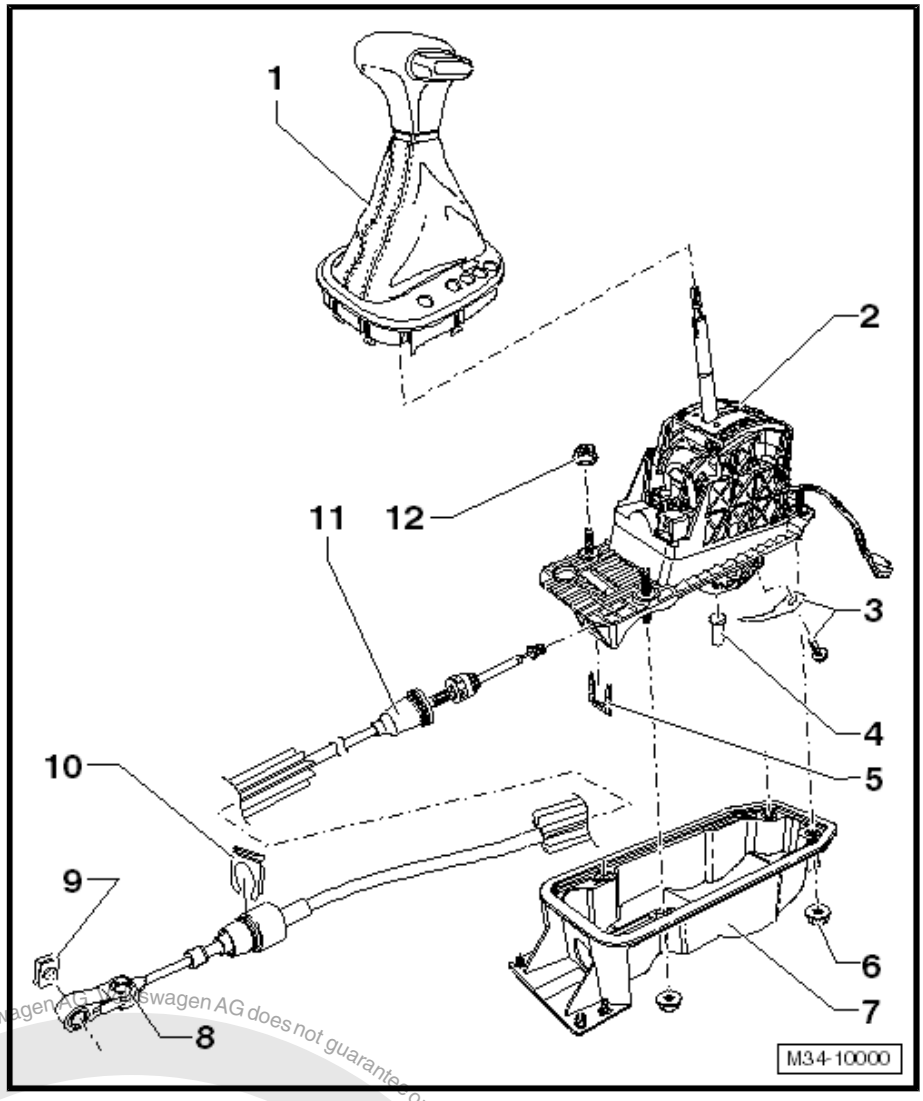

1 - Shift Cover with Handle

- ❑ Do not remove the handle unnecessarily. Only the cover must be unclipped for the emergency release. Refer to ⇒ "5.7 Selector Lever, Emergency Release", page 82 .
- ❑ Pull the button past its pressure point before removing the handle. Secure the button with a cable tie or some suitable wire. This prevents the locking button from being pushed back into knob accidentally.

2 - Selector Lever and Selector Mechanism

- ❑ With Shift Lock Solenoid - N110-
- ❑ Emergency release. Refer to ⇒ "5.7 Selector Lever, Emergency Release", page 82 .
- ❑ Short description for removal and installation:

– Remove the center console.

– Remove the selector lever cable from the transmission. Refer to ⇒ "5.2 Selector Lever Cable, Removing and Installing, through 02/2009", page 64 .

– If necessary, disconnect or remove sections of the exhaust system. Refer to ⇒ Rep. Gr. 26 .

– Remove the heat shield under the selector mechanism.

– Adjust the selector lever cable after installing. Refer to ⇒ "5.6 Selector Lever Cable, Adjusting", page 80 .

3 - Bolt with Spring

- ❑ 3 Nm

4 - Pin

- ❑ Removing. Refer to ⇒ "5.2 Selector Lever Cable, Removing and Installing, through 02/2009", page 64 .
- ❑ Do not lubricate

5 - Locking Plate

- ❑ Always replace after removing

6 - Nut

- ❑ 9 Nm
- ❑ Quantity: 4

7 - Gearshift Housing

- ❑ With seal

Protected by copyright. Copying for private or commercial purposes, in part or in whole, is not permitted unless authorized by Volkswagen AG. Volkswagen AG does not guarantee or accept any liability with respect to the correctness of information in this document. Copyright by Volkswagen AG.

8 - Adjusting Bolt

- ❑ 13 Nm

9 - Lock Washer

- ❑ Always replace after removing

10 - Lock Washer

- ❑ Always replace after removing

11 - Selector Lever Cable

- ❑ Do not grease the selector lever cable.
- ❑ Removing and installing. Refer to ⇒ “5.2 Selector Lever Cable, Removing and Installing, through 02/2009”, page 64 .
- ❑ Checking. Refer to ⇒ “5.5 Selector Lever Cable, Checking”, page 80 .
- ❑ Adjusting. Refer to ⇒ “5.6 Selector Lever Cable, Adjusting”, page 80 .

12 - Hex Nut with Collar

- ❑ 8 Nm
- ❑ Quantity: 4

5.2 Selector Lever Cable, Removing and Installing, through 02/2009

Protected by copyright. Copying for private or commercial purposes, in part or in whole, is not permitted unless authorised by Volkswagen AG. Volkswagen AG does not guarantee or accept any liability with respect to this document. Copyright by Volkswagen AG.

Note

After installation, the selector lever cable must be checked for ease of movement and adjusted.

Removing

– Move the selector lever into “S”.

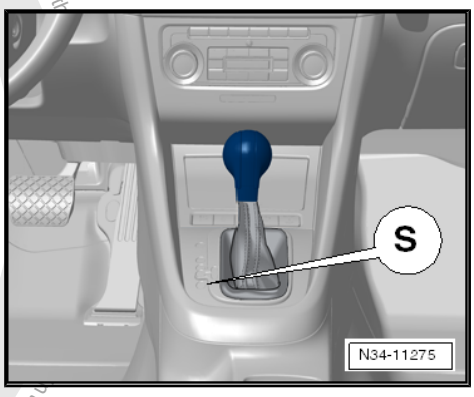

Loosen the adjusting screw -arrow-.

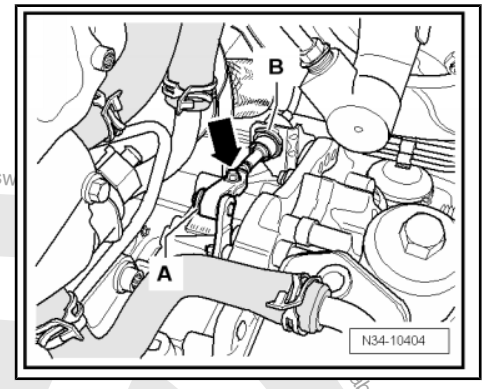

Note

Use pliers to remove the lock washer -B- from the cable bracket. Do not use a sharp-edged lever. This could damage the selector lever cable rubber grommet.

– Remove the lock washers -A and B-. The lock washers must later be replaced when adjusting the selector lever cable.

– Raise the vehicle.

To remove the selector level cable or the selector mechanism, the heat shield under the selector mechanism must be removed as follows:

Caution

Risk of damaging the decoupling element.

- ***Do not bend the decoupling element more than 10°.***
- ***Do not load the decoupling element.***
- ***Do not damage the wire mesh on the decoupling element.***

– Loosen the nuts on the clamping sleeve -1- and then slide it toward the rear.

– Remove the front tunnel brace -arrows- from the underbody.

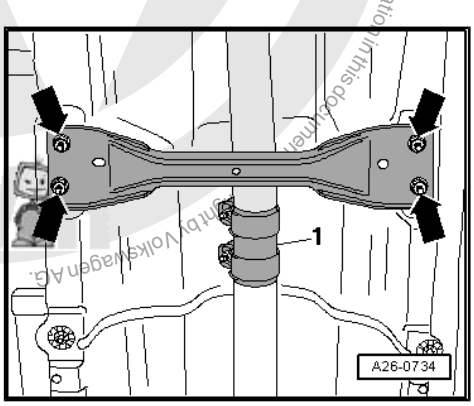

– If necessary remove the exhaust system bracket from the subframe -arrows-.

– Tie up the front exhaust pipe.

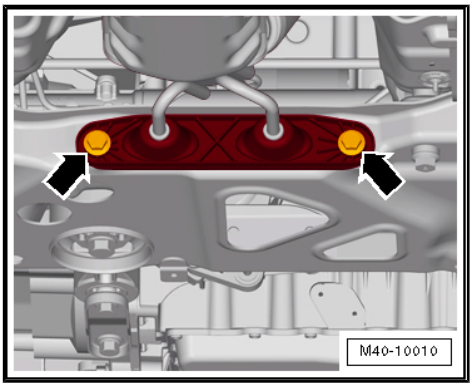

Protected by copyright. Copying for private or commercial purposes, in part or in whole, is not permitted unless authorised by Volkswagen AG. Volkswagen AG does not guarantee or accept any liability with respect to the correctness of information in this document.

Protected by copyright. Copying for private or commercial purposes, in part or in whole, is not permitted unless authorised by Volkswagen AG. Volkswagen AG does not guarantee or accept any liability with respect to the correctness and completeness of this document.

– If equipped, remove nuts -1 and 2-, and remove the rear tunnel brace.

– Disengage the center muffler and the rear muffler from the retaining loops -arrows- and tie them to the body for example with a wire. Remove the exhaust system rear section, if necessary.

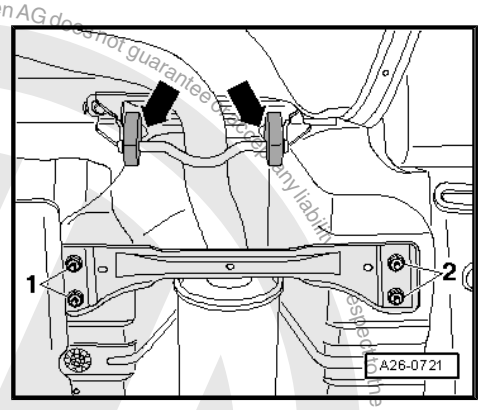

– Remove the underbody trim panel nuts -arrows-.

– Remove the lock washers -2 and 3-.

– Lower the underbody trim panel on the inside just enough until the heat shield -1- for the center tunnel can be removed.

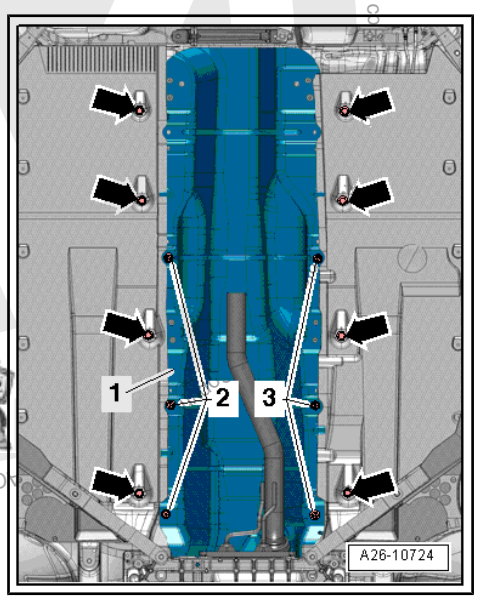

– Remove the -selector housing- from under the selector lever.

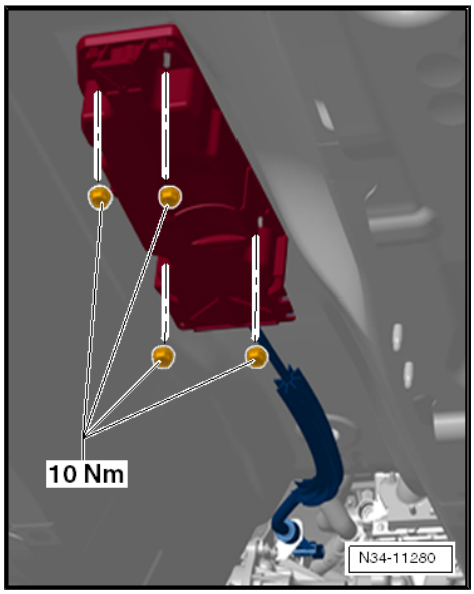

– Remove the locking plate on the cable mounting bracket. Always replace the locking plate.

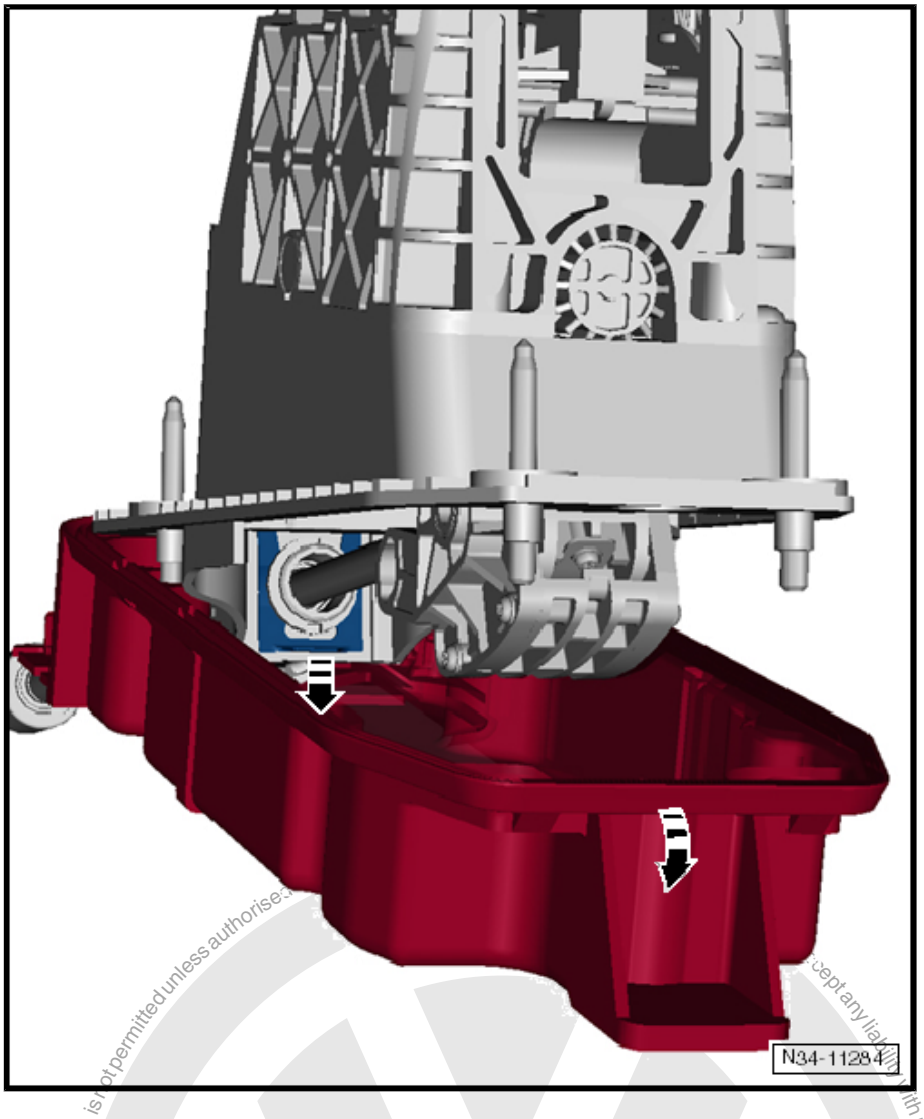

The -shift housing- is pushed forward slightly on the selector lever cable.

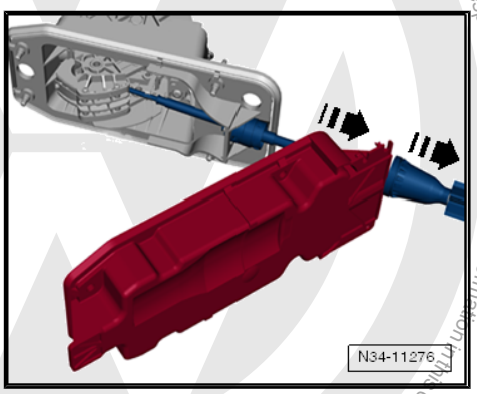

Protected by copyright. Copying for private or commercial purposes, in part or in whole, is not permitted unless authorised. Copyright by Volkswagen AG. ...cept any liability with respect to the correctness of information in this document.

The locking strap must be pushed forward in order to remove the selector lever cable in direction of -arrow 1-.

– Push the -pin- upward with a screwdriver at the same time in direction of -arrow 2-.

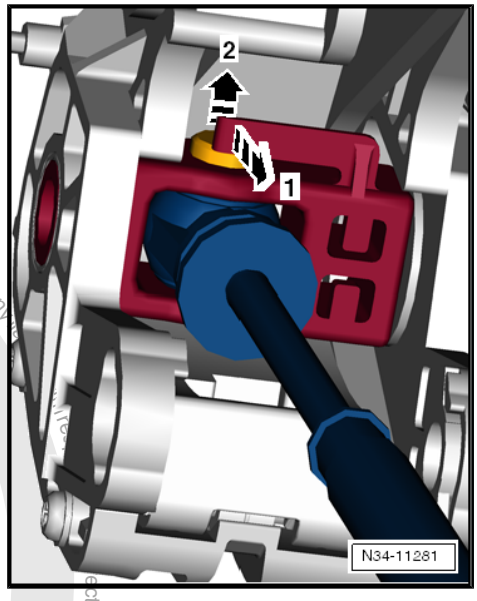

– Insert the -screwdriver- from underneath while pushing the securing tab forward.

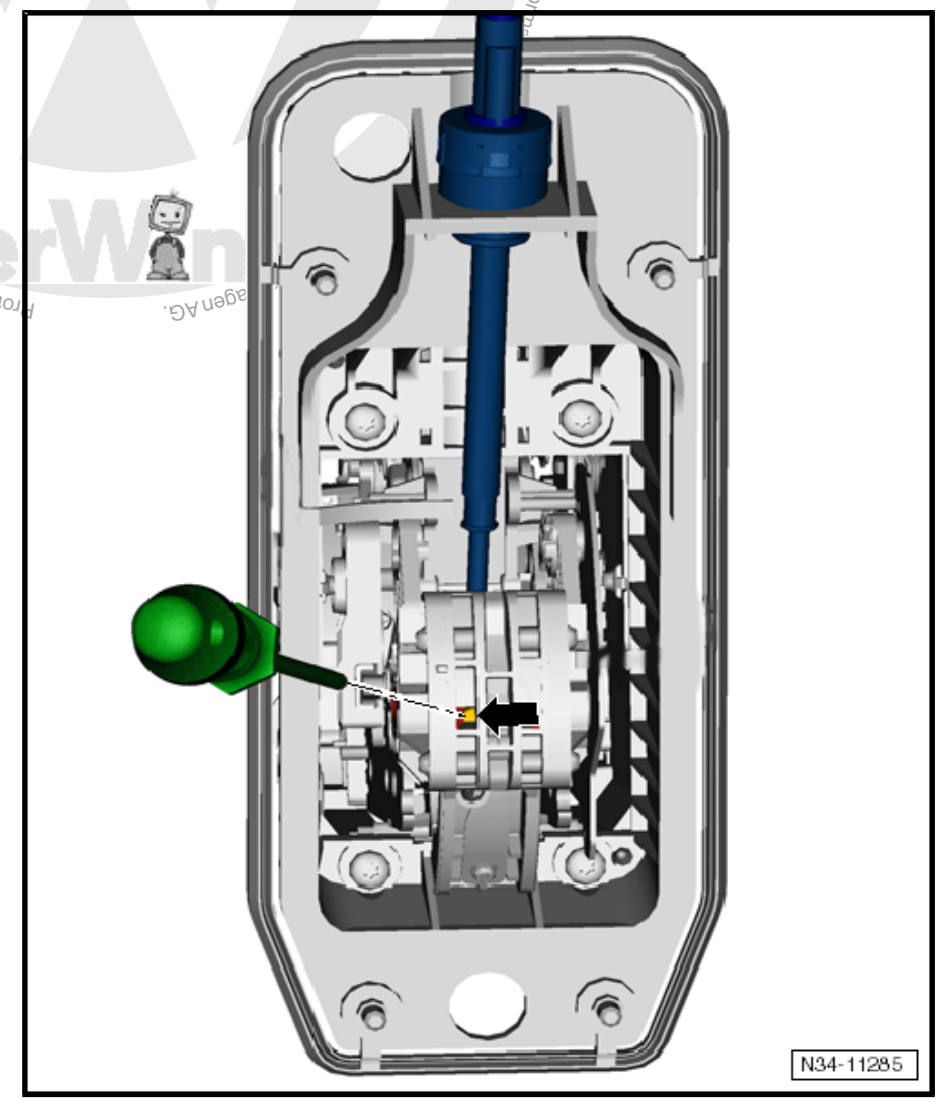

Protected by copyright. Copying for private or commercial purposes, in part or in whole, is not permitted unless authorised by Volkswagen AG. Volkswagen AG does not guarantee or accept any liability with respect to the correctness of information in this repair manual.

For Clarity

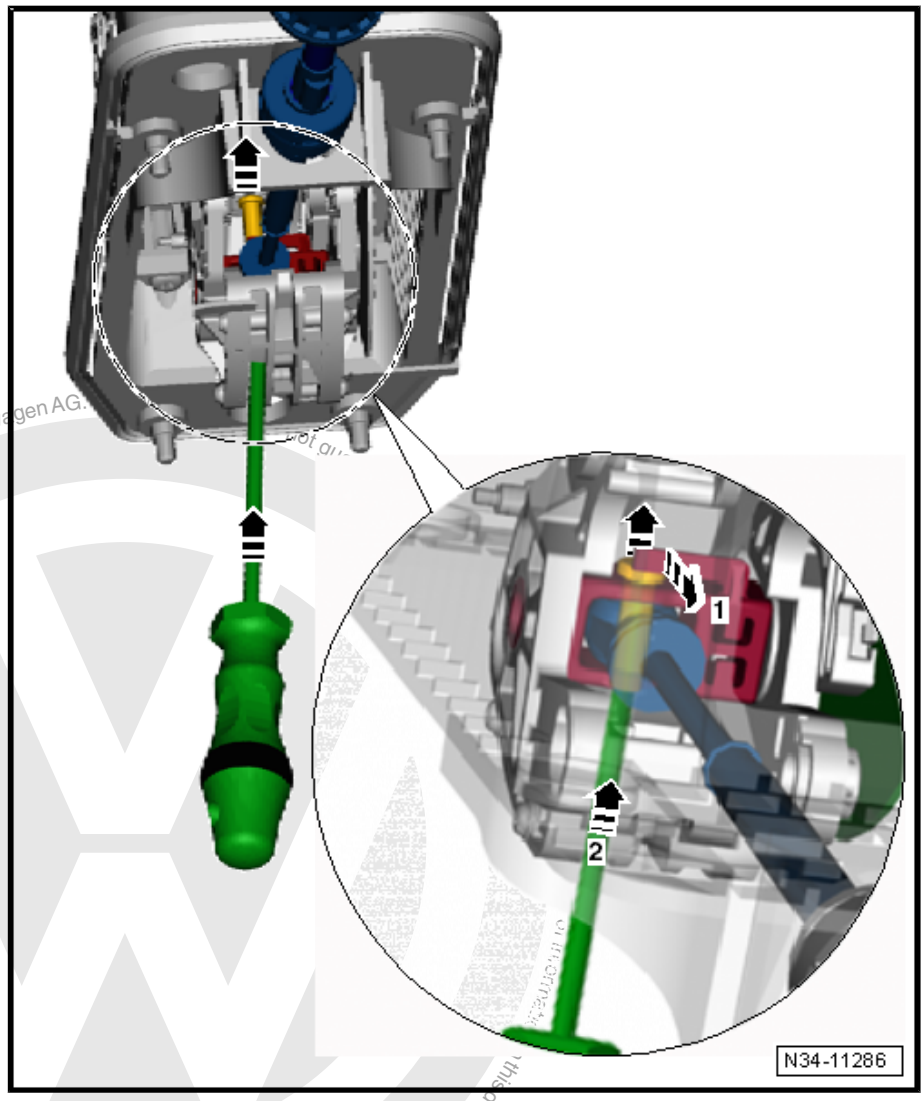

– Remove the selector lever cable.

Remove the selector lever cable from the selector housing.

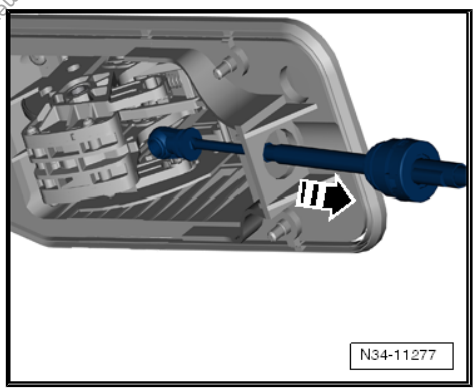

Installing

Do not lubricate the selector lever cable.

– Route the selector lever cable making sure it is without tension. Install also into the cable bracket on the transmission. Do not secure yet with the lock washers. Do not clip in the ball head.

Protected by copyright. Copying for private or commercial purposes, in part or in whole, is not permitted unless authorised by Volkswagen AG.
Copyright by Volkswagen AG.

– When installing, make sure the selector lever cable is routed correctly.

If the heat shield underneath is bent, there will be noises. The selector lever cable will then »flap« on the heat shield.

– Pay attention to the heat shield. Push it upward into the tunnel in the direction of -arrow-.

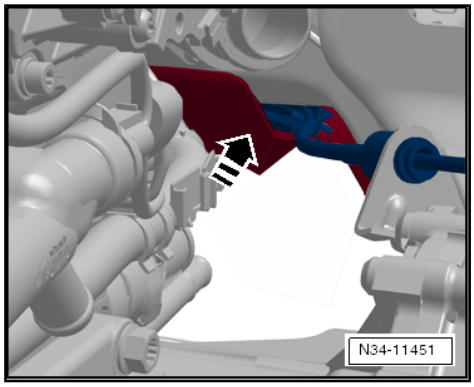

– Position the selector housing on the selector lever cable.

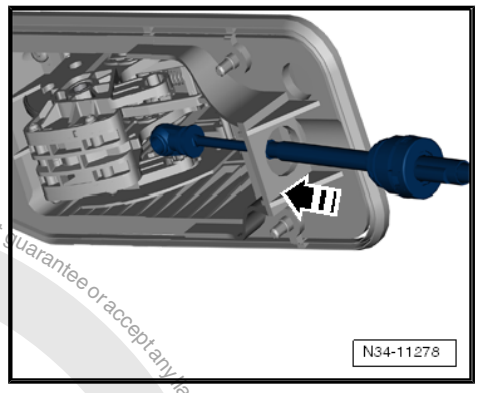

– Install the selector lever cable into the selector mechanism.

– Insert the selector lever cable into the bracket and then insert the bolt through the eye from the top in the direction of -arrow 2-.

Install the locking plate only after having checked the selector lever cable for ease of movement. Refer to
⇒ “5.5 Selector Lever Cable, Checking”, page 80 .

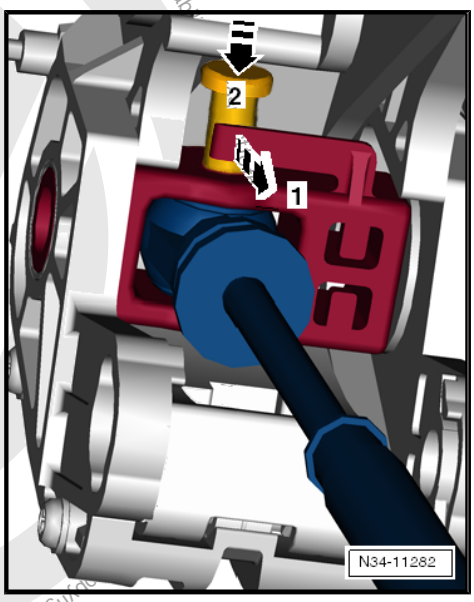

– Secure the selector lever cable with a new securing plate to the cable bracket on the selector mechanism.

Protected by copyright. Copying for private or commercial purposes, in part or in whole, is not permitted unless authorised by Volkswagen AG. Volkswagen AG does not guarantee or accept any liability
Copyright by Volkswagen AG.

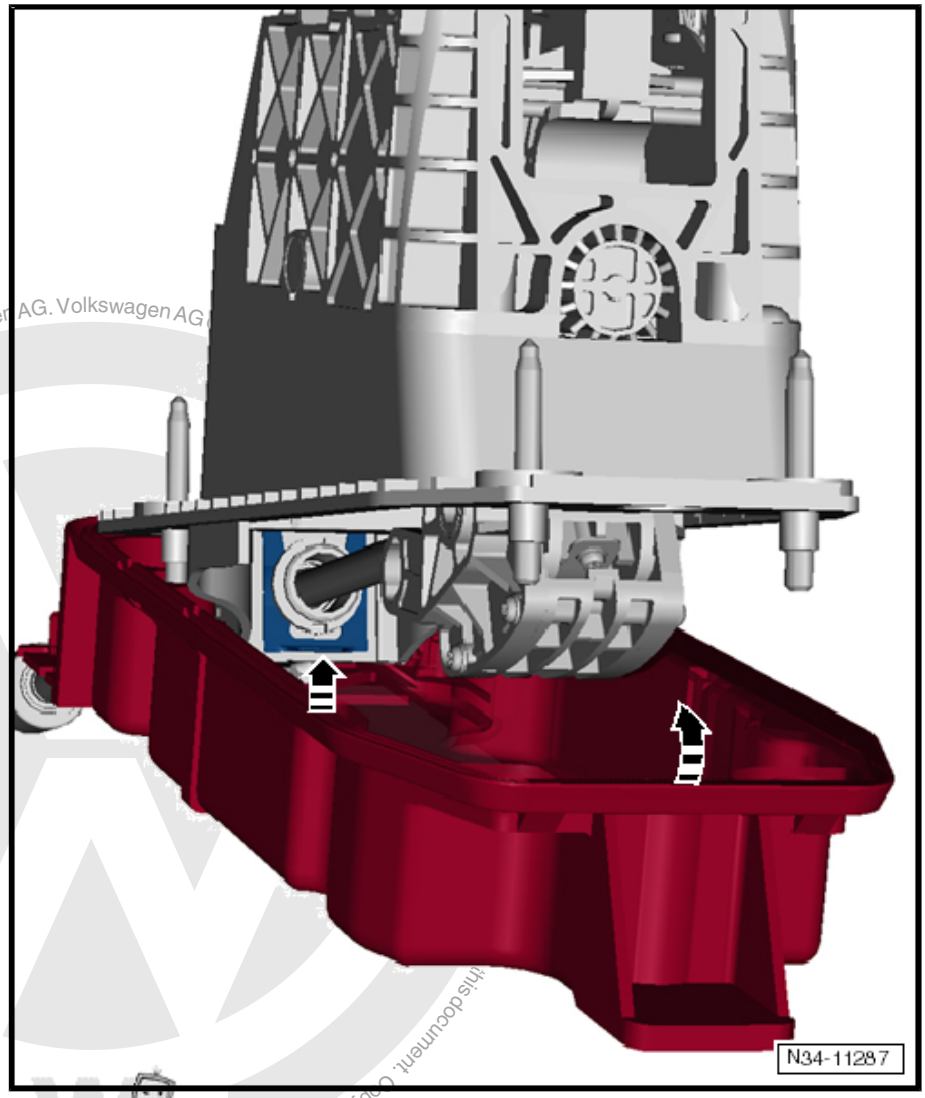

Protected by copyright. Copyright for private or commercial purposes, in part or in whole, is not permitted unless authorised by Volkswagen AG. Volkswagen AG
This document. Copyright by Volkswagen AG.

– Install the selector housing.

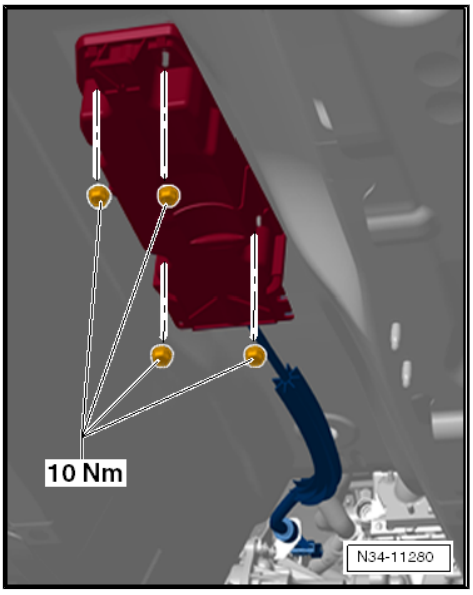

– Install the heat shield -1- under the selector mechanism and attach with the lock washers -2 and 3-.
– Attach the underbody trim panel to the body -arrows-.
– Install the exhaust system and align it without tension. Refer to ⇒ Rep. Gr. 26 .
– Install the tunnel braces under the exhaust system. Refer to ⇒ Body Exterior; Rep. Gr. 50 ; Tunnel Brace .
– Adjust the selector lever cable after installing. Refer to ⇒ “5.6 Selector Lever Cable, Adjusting”, page 80 .

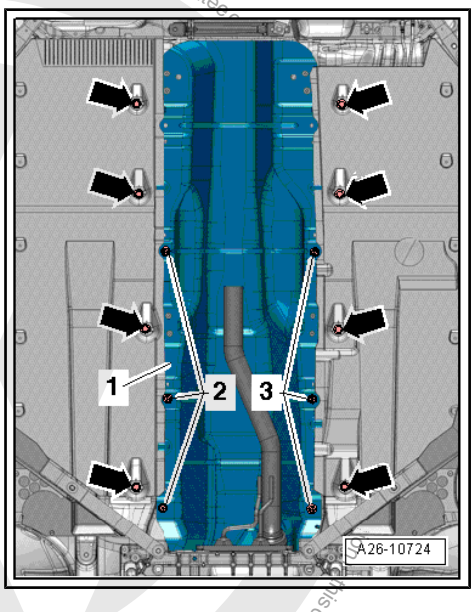

5.3 Overview - Selector Mechanism, Vehicles from 03/2009

1 - Shift Cover with Handle

- ❑ Do not remove the handle unnecessarily. Only the cover must be unclipped for the emergency release. Refer to ⇒ “5.7 Selector Lever, Emergency Release”, page 82 .
- ❑ Pull the button past its pressure point before removing the handle. Secure the button with a cable tie or some suitable wire. This prevents the locking button from being pushed back into knob accidentally.
- ❑ Selector lever handle, Removing and installing. Refer to ⇒ “5.8 Selector Lever Handle, Removing and Installing”, page 82 .

2 - Selector Mechanism with Selector Lever and Selector Lever Cable

- ❑ With integrated Selector Lever Sensor System Control Module - J587- with Selector Lever - E313- , Tiptronic Switch - F189- , Selector Lever Park Position Lock Switch - F319- and Shift Lock Solenoid - N110- .
- ❑ The selector lever cable can only be replaced together with the selector mechanism

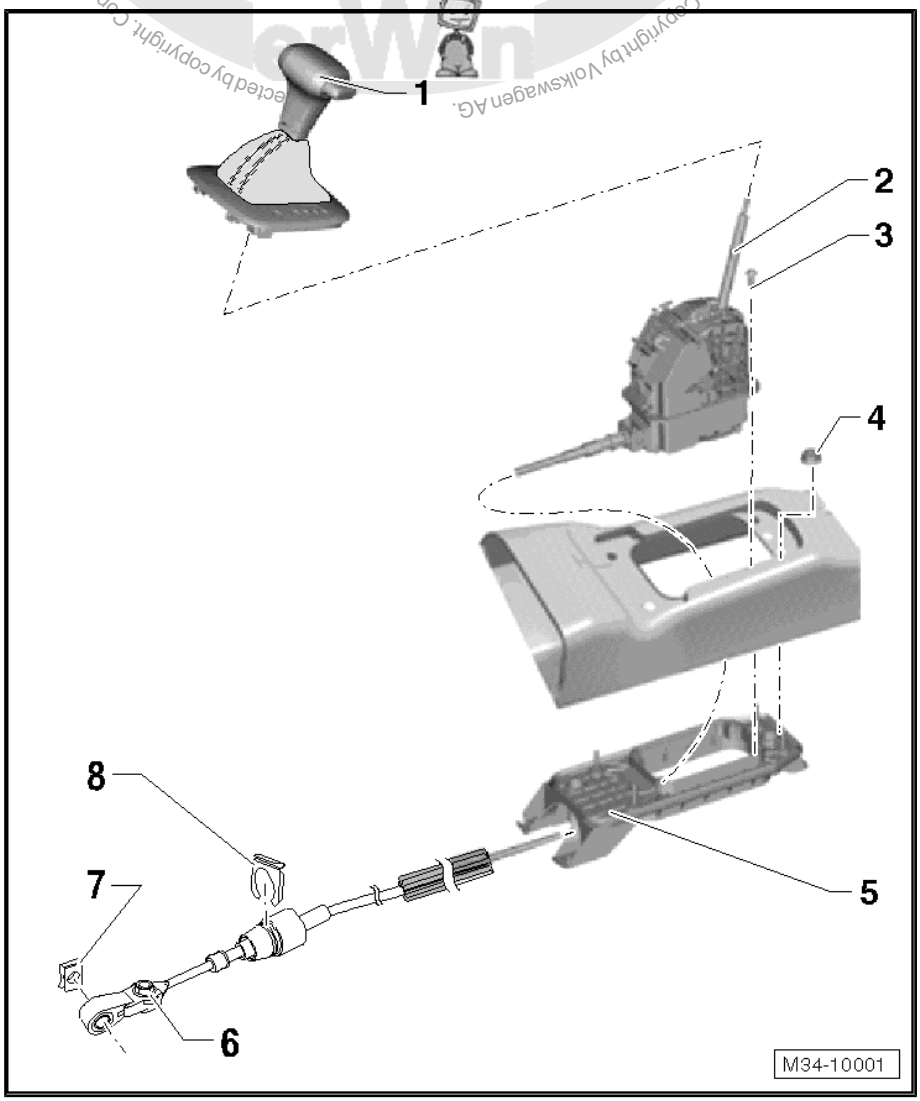

- ❑ Do not grease the selector lever cable.
- ❑ Removing and installing. Refer to ⇒ “5.4 Selector Mechanism, Removing and Installing, Vehicles from 03/2009”, page 73 .
- ❑ Checking. Refer to ⇒ “5.5 Selector Lever Cable, Checking”, page 80 .
- ❑ Adjusting. Refer to ⇒ “5.6 Selector Lever Cable, Adjusting”, page 80 .

3 - Bolt

- ❑ 8 Nm

4 - Hex Nut with Collar

- ❑ 8 Nm
- ❑ Quantity: 4

5 - Gearshift Housing

- ❑ Available only together with the selector mechanism. Refer to the Parts Catalog.

6 - Adjusting Bolt

- ❑ 13 Nm

7 - Lock Washer

- ❑ Always replace after removing

8 - Locking Plate

- ❑ Always replace after removing

5.4 Selector Mechanism, Removing and Installing, Vehicles from 03/2009

⇒ “5.4.1 Selector Mechanism with Selector Housing, Removing and Installing”, page 73

⇒ “5.4.2 Selector Mechanism without Selector Housing, Removing and Installing”, page 77

5.4.1 Selector Mechanism with Selector Housing, Removing and Installing

Brief Description

The selector mechanism and the selector lever cable must be separated from each other. Both are removed with the selector housing.

Remove the center console inside the vehicle interior.

It is necessary to remove the heat shield under the vehicle.

It is possible to remove and install the selector mechanism with selector lever cable alone without the selector housing. Refer to ⇒ “5.4.2 Selector Mechanism without Selector Housing, Removing and Installing”, page 77 .

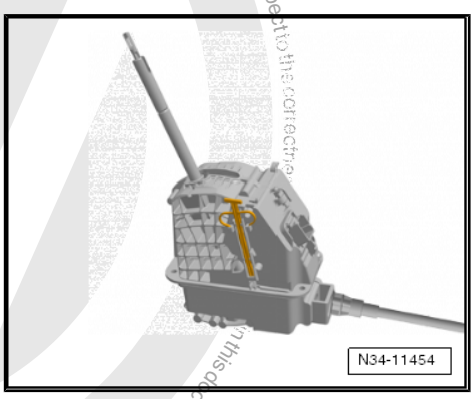

Note

After installation, the selector lever cable must be checked for ease of movement and adjusted.

Removing

Protected by copyright. Copying for private or commercial purposes, in part or in whole, is not permitted unless authorised by Volkswagen AG. Volkswagen AG does not guarantee or accept any liability with respect to the correctness of information in this document. Copyright by Volkswagen AG.

– Move the selector lever into “P”.

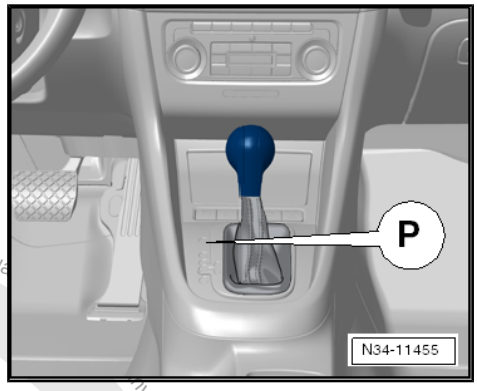

– Remove the selector lever handle and disconnect the connector -2- from the cover while doing so. Refer to ⇒ “5.8 Selector Lever Handle, Removing and Installing”, page 82 .

– Remove the center console. Refer to ⇒ Body Interior; Rep. Gr. 68 ; Center Console .

– Disconnect the connector -1- from the selector mechanism to the vehicle wiring harness.

– Remove the air filter housing:

♦ Gasoline engine. Refer to ⇒ Rep. Gr. 24 ; Air Filter; Air Filter Housing, Removing and Installing .

♦ TDI engine. Refer to ⇒ Rep. Gr. 23 ; Diesel Direct Injection System; Air Filter Housing, Removing and Installing .

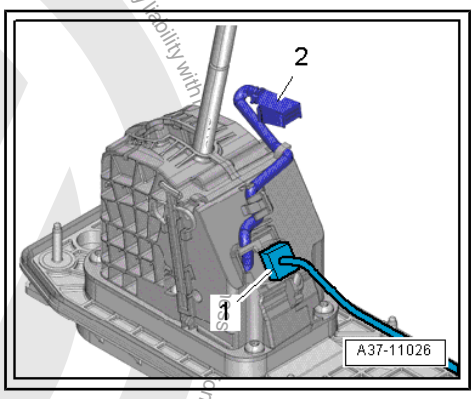

Loosen the adjusting screw -arrow-.

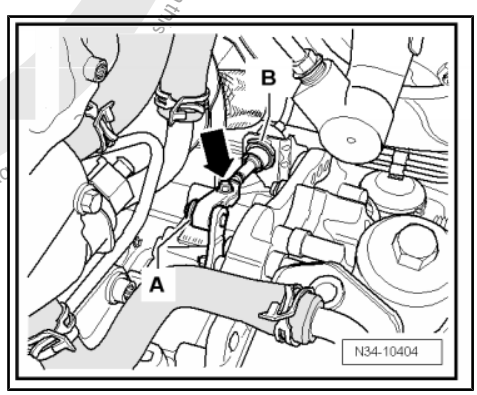

Note

Use pliers to remove the lock washer -B- from the cable bracket. Do not use a sharp-edged lever. This could damage the selector lever cable rubber grommet.

– Remove the lock washers -A and B-. The lock washers must later be replaced when adjusting the selector lever cable.

– Raise the vehicle.

To remove the selector level cable or the selector mechanism, the heat shield under the selector mechanism must be removed as follows:

Caution

Risk of damaging the decoupling element.

- *Do not bend the decoupling element more than 10°.*
- *Do not load the decoupling element.*
- *Do not damage the wire mesh on the decoupling element.*

Copyright. Copying for private or commercial purposes, in part or in whole, is not permitted unless authorised by Volkswagen AG. Volkswagen AG does not guarantee or accept any liability with respect to the correctness and completeness of this documentation.

– Loosen the nuts on the clamping sleeve -1- and then slide it toward the rear.
– Remove the front tunnel brace -arrows- from the underbody.

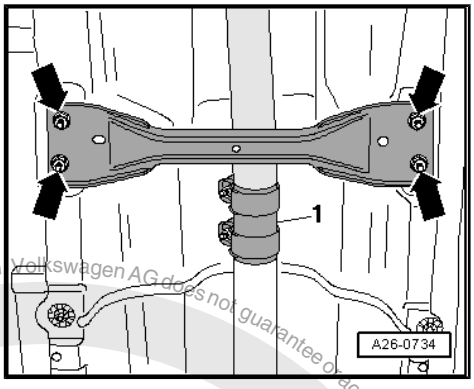

– If necessary remove the exhaust system bracket from the subframe -arrows-.
– Tie up the front exhaust pipe.

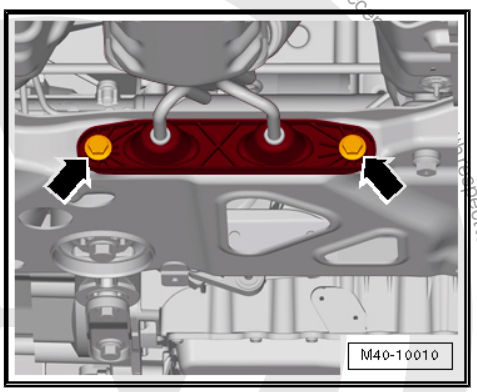

– If equipped, remove nuts -1 and 2- and remove the rear tunnel brace.
– Disengage the center muffler and the rear muffler from the retaining loops -arrows- and tie them to the body for example with a wire. Remove the exhaust system rear section, if necessary.

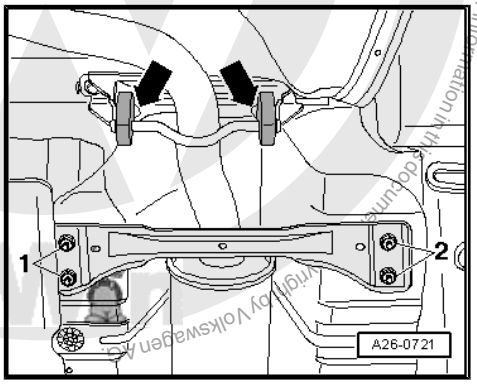

– Remove the underbody trim panel nuts -arrows-.
– Remove the lock washers -2 and 3-.
– Lower the underbody trim panel on the inside just enough until the heat shield -1- for the center tunnel can be removed.

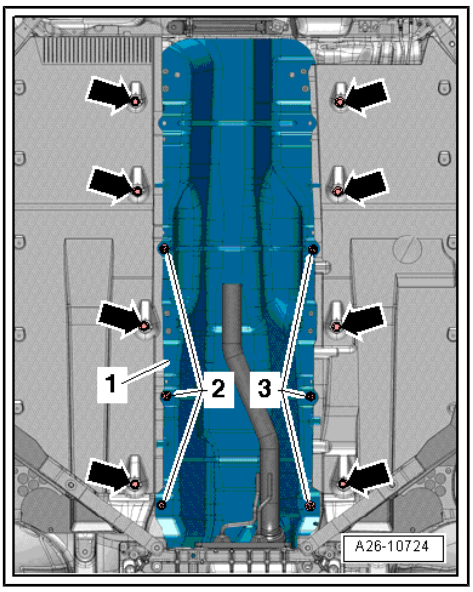

Note

A second technician is required under the vehicle to remove the selector mechanism.

Protected by copyright. Copying for private or commercial purposes, in part or in whole, is not permitted unless authorised by Volkswagen AG. Volkswagen AG does not guarantee or accept any liability with respect to the correctness of information in this document.

Protected by copyright. Copying for private or commercial purposes, in part or in whole, is not permitted unless authorised by Volkswagen AG. Volkswagen AG does not guarantee or accept any liability with respect to the correctness of information in this document.

– Remove the nuts -arrows- in the vehicle interior.

– Remove the bracket -A-, if equipped.

– Remove the selector mechanism -B- with the selector lever cable and selector housing downward.

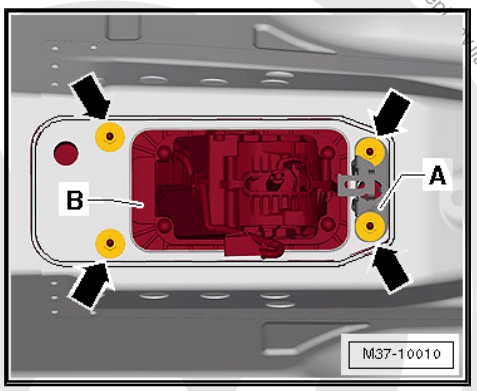

Installing

Install in reverse order of removal.

Note

- *Do not bend or kink the selector lever cable.*
- *Do not lubricate the selector lever cable.*
- *Tightening specifications. Refer to* *⇒ "5.3 Overview - Selector Mechanism, Vehicles from 03/2009", page 72* .

– Install the heat shield -1- under the selector mechanism and attach with the lock washers -2 and 3-.

– Attach the underbody trim panel to the body -arrows-. Refer to ⇒ Body Exterior; Rep. Gr. 50 ; Underbody Trim Panels .

– Install the exhaust system and align it without tension. Refer to ⇒ Rep. Gr. 26 .

– Install the tunnel braces under the exhaust system. Refer to ⇒ Body Exterior; Rep. Gr. 50 ; Tunnel Brace .

– Install the center console. Refer to ⇒ Body Interior; Rep. Gr. 68 ; Center Console .

– Install the selector lever handle. Refer to ⇒ "5.8 Selector Lever Handle, Removing and Installing", page 82 .

– Adjust the selector lever cable. Refer to ⇒ "5.6 Selector Lever Cable, Adjusting", page 80 .

– Check the selector mechanism. Refer to ⇒ "5.10 Selector Mechanism, Checking", page 86 .

– Install the air filter housing:

- Gasoline engine. Refer to ⇒ Rep. Gr. 24 ; Air Filter; Air Filter Housing, Removing and Installing .
- TDI engine. Refer to ⇒ Rep. Gr. 23 ; Diesel Direct Injection System; Air Filter Housing, Removing and Installing .

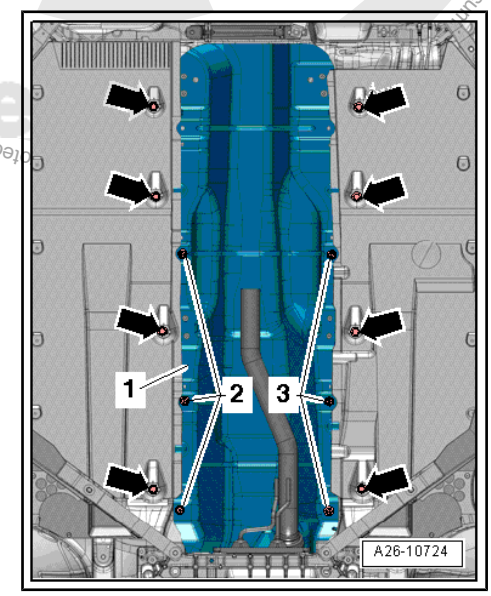

5.4.2 Selector Mechanism without Selector Housing, Removing and Installing

Brief Description

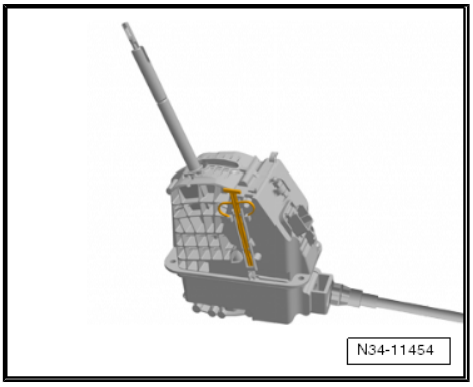

The selector mechanism and the selector lever cable must be separated from each other. Both are removed together.

Remove the center console inside the vehicle interior.

A cord is attached to the selector lever cable prior to removal. The cord is used to remove and install the selector lever cable between the tunnel and the heat shield.

The selector mechanism with selector lever cable can be removed and installed together with the selector housing. Refer to ⇒ “5.4.1 Selector Mechanism with Selector Housing, Removing and Installing”, page 73 .

Removing

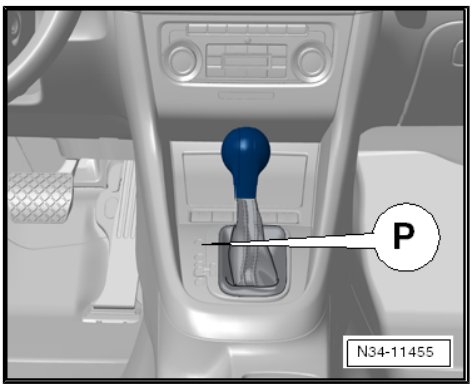

– Move the selector lever into “P”.

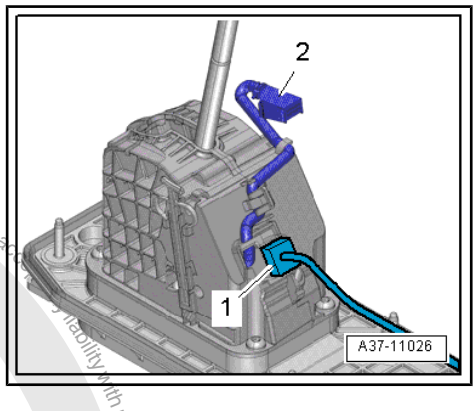

– Remove the selector lever handle and disconnect the connector -2- from the cover while doing so. Refer to ⇒ “5.8 Selector Lever Handle, Removing and Installing”, page 82 .

– Remove the center console. Refer to ⇒ Body Interior; Rep. Gr. 68 ; Center Console .

– Disconnect the connector -1- from the selector mechanism to the vehicle wiring harness.

– Remove the air filter housing:

♦ Gasoline engine. Refer to ⇒ Rep. Gr. 24 ; Air Filter; Air Filter Housing, Removing and Installing .

♦ Diesel engine. Refer to ⇒ Rep. Gr. 23 ; Diesel Direct Injection System; Air Filter Housing, Removing and Installing .

Protected by copyright. Copyright for private or commercial purposes, in part or in whole is not permitted unless authorised by Volkswagen AG. Volkswagen AG does not guarantee or accept any liability with respect to the correctness of information in this document. Copyright by Volkswagen AG.

Loosen the adjusting screw -arrow-.

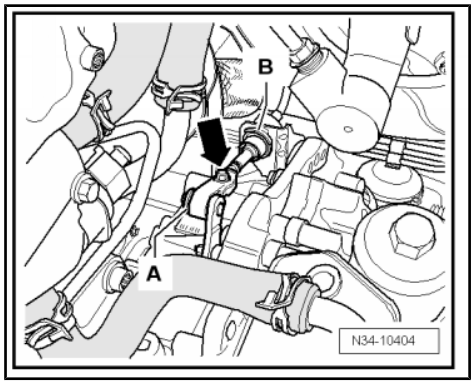

Note

Use pliers to remove the lock washer -B- from the cable bracket. Do not use a sharp-edged lever. This could damage the selector lever cable rubber grommet.

- Remove the lock washers -A and B-. The lock washers must later be replaced when adjusting the selector lever cable.
- Raise the vehicle.
- Attach a longer cord to the end of the selector lever cable. The cord is used to guide the selector lever cable between the tunnel and the heat shield during installation.
- Remove the four bolts attaching the selector mechanism to the selector housing.

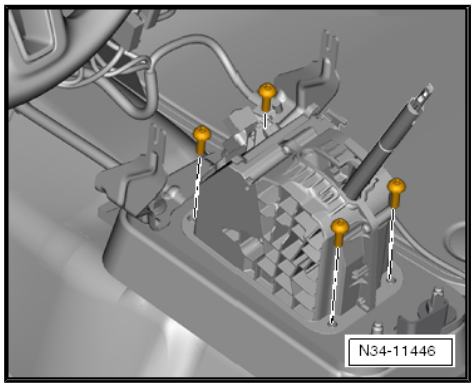

Protected by copyright. Copyright for private or commercial purposes, in part or in whole, is not permitted unless authorised by Volkswagen AG. Volkswagen AG does not guarantee or accept any liability with respect to the correctness of information in this document. Copyright by Volkswagen AG.

– Pull the selector mechanism and selector lever cable carefully out of the center tunnel. Make sure the cord is pulled through far enough so that it can reached from inside the engine compartment.

– Remove the selector lever cable cord.

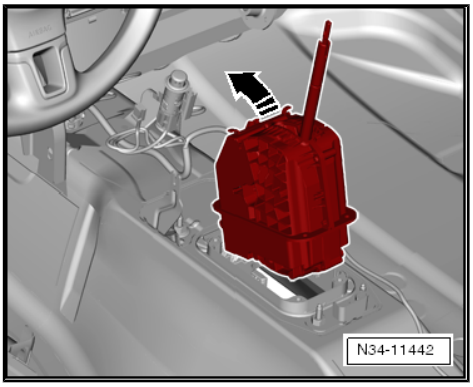

Note

The selector mechanism is available only together with the selector housing and selector lever cable. Refer to the Parts Catalog.

Installing

Install in reverse order of removal. Note the following:

A second technician is needed for threading the selector lever cable from the passenger compartment into the engine compartment.

Note

- *Do not bend or kink the selector lever cable.*
- *Do not lubricate the selector lever cable.*
- *Tightening specifications. Refer to* *⇒ "5.3 Overview - Selector Mechanism, Vehicles from 03/2009", page 72* .

– Secure the cord that was involved when removing the selector mechanism from the engine compartment on the end of the selector lever cable.

– Guide the selector mechanism and selector lever cable through the opening in the center tunnel.

– From the engine compartment, have the second technician pull the cord with the selector lever cable through the tunnel until it is possible to attach the selector lever cable to the cable bracket.

– Remove the selector lever cable cord.

– Attach the selector mechanism to the selector housing with four bolts.

– Install the center console. Refer to ⇒ Body Interior; Rep. Gr. 68 ; Center Console .

– Install the selector lever handle. Refer to ⇒ "5.8 Selector Lever Handle, Removing and Installing", page 82 .

– Adjust the selector lever cable. Refer to ⇒ "5.6 Selector Lever Cable, Adjusting", page 80 .

– Check the selector mechanism. Refer to ⇒ "5.10 Selector Mechanism, Checking", page 86 .

– Install the air filter housing:

- Gasoline engine. Refer to ⇒ Rep. Gr. 24 ; Air Filter; Air Filter Housing, Removing and Installing .
- TDI engine. Refer to ⇒ Rep. Gr. 23 ; Diesel Direct Injection System; Air Filter Housing, Removing and Installing .

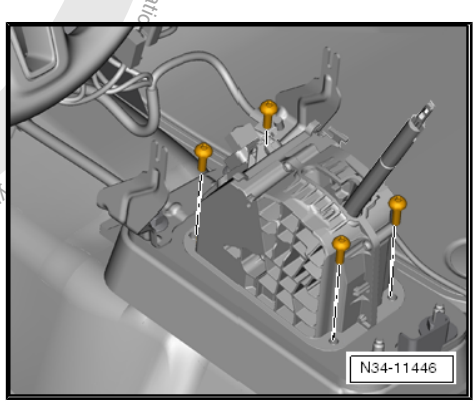

Copyright by Volkswagen AG. Volkswagen AG does not guarantee or accept any liability with respect to the correctness of information. Protected by copyright. Any private or commercial use in conjunction with unauthorized electronic data processing systems is not permitted unless authorized by Volkswagen AG.

5.5 Selector Lever Cable, Checking

Brief Description

The selector lever cable must be removed from the transmission in order to check it for ease of movement. Do not let the removed end touch anything.

Then the selector lever is moved and the selector lever cable installed again on the transmission.

After that, the selector lever cable must be adjusted. Refer to ⇒ “5.6 Selector Lever Cable, Adjusting”, page 80 .

Do not lubricate the selector lever cable connections.

Checking

– Move the selector lever into »P«.

– Remove the selector lever cable from the lever on the transmission.

– Move the selector lever from »P« to »S« and back to »P« several times.

• The selector lever must have ease of movement.

– Install the selector lever cable with new lock washers and the »loosened« adjustment screw.

– Adjust the selector lever cable. Refer to ⇒ “5.6 Selector Lever Cable, Adjusting”, page 80 .

5.6 Selector Lever Cable, Adjusting

Special tools and workshop equipment required

♦ Torque Wrench 1331 5-50Nm - VAG1331-

Selector Lever Cable Must Always Be Adjusted If:

♦ The selector lever cable was removed from the transmission.

♦ The engine and/or transmission were removed and installed.

♦ Sections of the subframe mount were removed and installed.

♦ The selector lever cable itself or the selector mechanism was removed and installed.

♦ The engine/transmission position was changed, for example, were installed without tension.

Adjusting

– Move the selector lever into “P”.

Protected by copyright. Copyright by Volkswagen AG. Copyright by Volkswagen AG. Volkswagen AG does not guarantee or accept any liability with respect to the correctness of information in this document.

Move the Lever on the Transmission into “P”.

The lever on the transmission must be pushed »all the way to the rear«.

– Pull the lever forward.

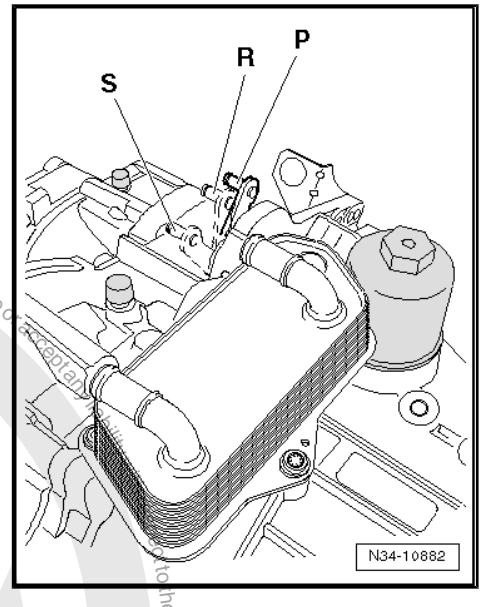

– Push the lever »to the rear« -arrow-.

“P” is in the Second Detent.

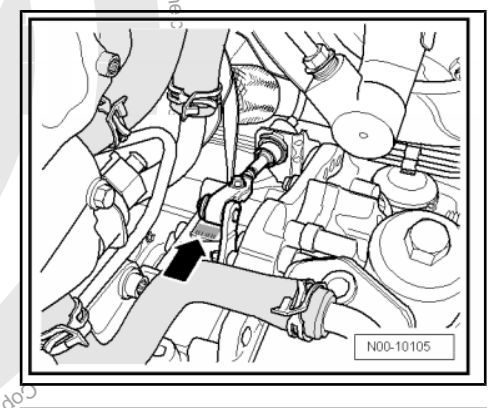

Note

- *Raise the vehicle to make sure the transmission is in “P” (parking lock is engaged). The front wheels must not turn together in any direction.*
- *The transmission is also in “P” if the vehicle does not move with wheels spinning freely.*

– Install the selector lever cable with the loosened adjusting screw -arrow- and the new lock washer -A and B-.

– Tap the handle on the selector lever back and forth gently but do not move it out of “P” under any circumstances.

This places the selector lever cable core in its optimal position.

– Tighten the adjusting bolt -arrow- to 13 Nm.

This ends the adjustment.

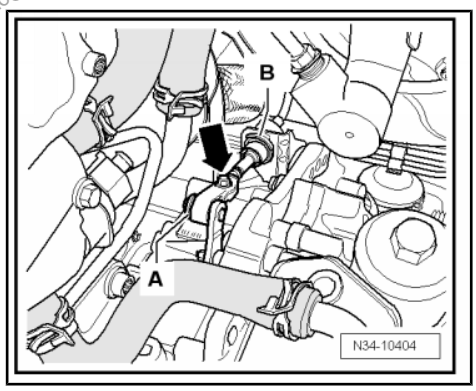

Copyright by Volkswagen AG. Volkswagen AG does not guarantee or accept any liability with respect to the correctness of information in this document. Copying for private or commercial purposes, in part or in whole, is not permitted unless authorised by Volkswagen AG. Volkswagen AG does not guarantee or accept any liability with respect to the correctness of information in this document. Copyright by Volkswagen AG.

5.7 Selector Lever, Emergency Release

Do Not Remove the Handle

– Unclip the shift cover and hold it to the side.

– Press the brake or set the parking brake.

Vehicles through 02/2009

– Press on the yellow plastic piece from the right to the left in direction of -arrow-.

– Or press it onto the solenoid pins.

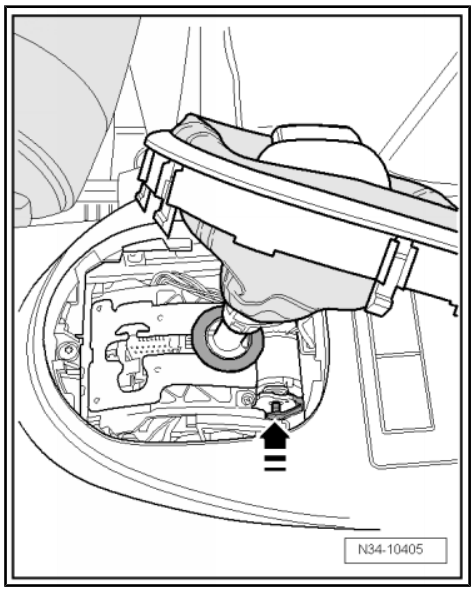

Vehicles from 03/2009

– Push onto the yellow plastic part -arrow-.

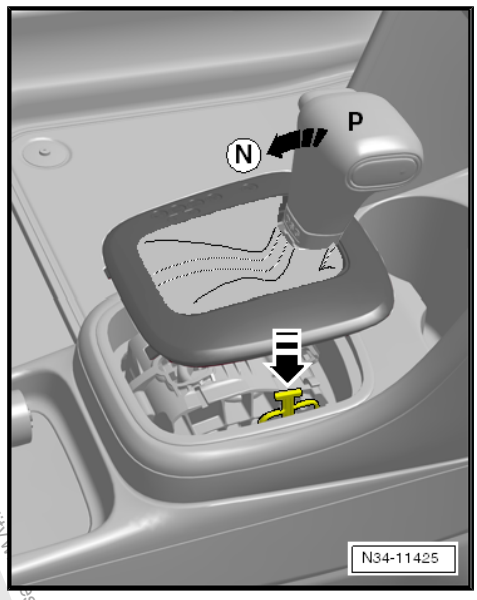

5.8 Selector Lever Handle, Removing and Installing

Brief Description

There are different handles depending on the model.

The handle is removed together with the shift cover.

Removing

1 – Move the selector lever into “D” position.

Protected by copyright. Copying for private or commercial purposes, in part or in whole, is not permitted unless authorised by Volkswagen AG. Volkswagen AG does not guarantee or accept any liability with respect to the correctness of information in this document. Copyright by Volkswagen AG.

Handle with Side Button

– Pull the button out of the handle just far enough until a small gap is visible between the handle and the button. The button locks when released.

– Secure the button in this position with a cable tie or wire to prevent the button from being pressed in.

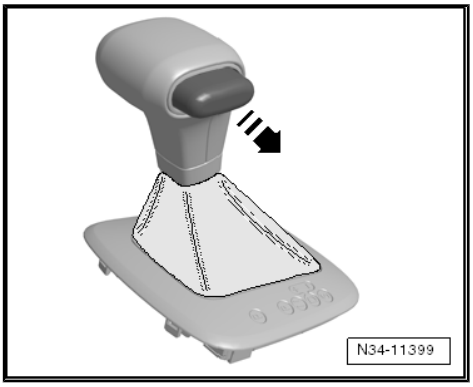

Handle with Front Button

– It is not necessary to pull out the button by hand. The button locks in the installation position -arrow- when the handle is removed.

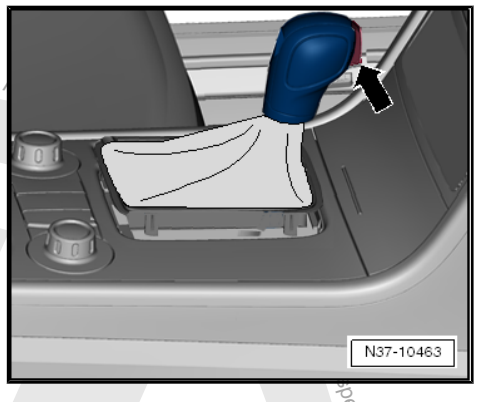

Vehicle with Sleeve

– Unclip the cover.

Disconnect the connector from the shift cover.

Push the sleeve upward in direction of -arrow- to unlock the handle.

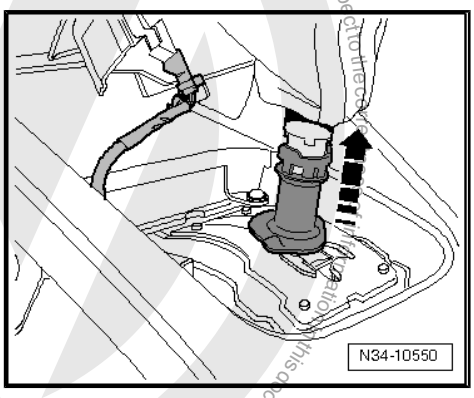

Vehicle with Clamp

– Cut the clamp under the boot -arrow- with a side cutter.

All Handles

– Remove the handle from the selector lever without pushing the button.

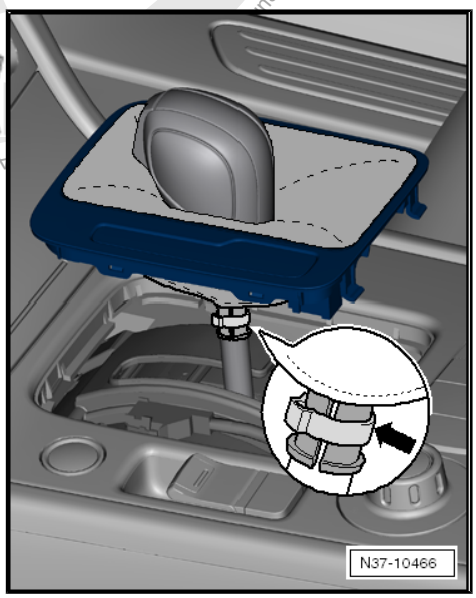

Note

Do not push the button once the handle has been removed otherwise it will not be possible to install the handle again.

Installing

– Install in reverse order of removal while noting the following:

• The selector lever is in the “D” position.

Protected by copyright. Copying for private or commercial purposes, in part or in whole, is not permitted unless authorised by Volkswagen AG. Volkswagen AG

Handle with Side Button

- The button inside the handle is pulled out and if necessary is protected from getting pushed in again.

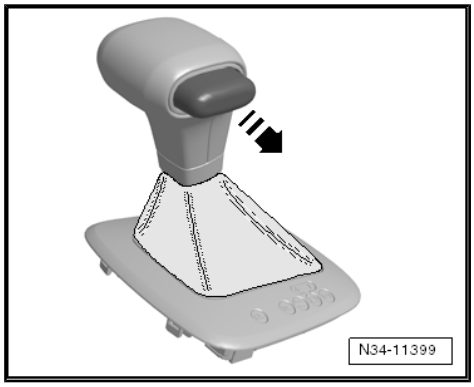

Handle with Front Button

- The button is in the installation position -arrow-.

If the button was pushed in by mistake, the installation position can be set again.

– Move the button into the installation position. Refer to ⇒ “5.9 Button in Handle, Moving into Installation Position”, page 85 .

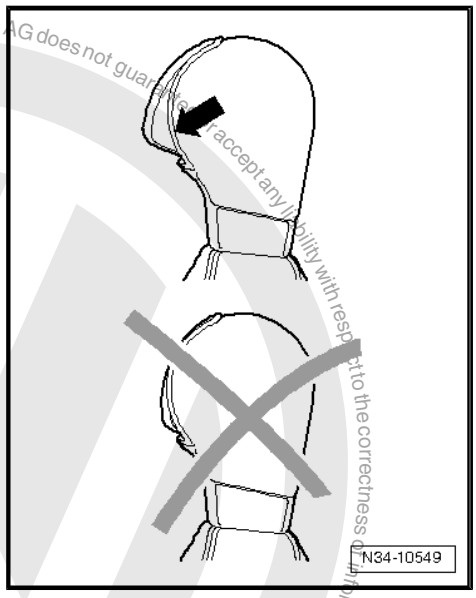

Note

A new handle is delivered with an assembly fastener. Remove the retainer just before installing.

Vehicle with Sleeve

– Install the handle all the way onto the selector lever and lock it.

– Push the sleeve downward to lock it.

Vehicle with Clamp

– Install the handle all the way with a new clamp.

– Clamp off the clamps using Hose Clamp Pliers - VAG1275- .

– Press the button after installation.

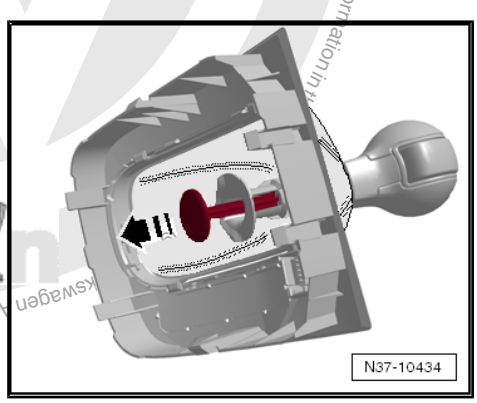

Note

If the button stays in the handle after being pressed, this means it was installed incorrectly. If this happens, remove the handle again and move the button in the installation position again. Refer to ⇒ “5.9 Button in Handle, Moving into Installation Position”, page 85 . Then the handle can be installed again.

Further installation is performed in reverse order of the removal.

Protected by copyright. Copying for private or commercial purposes, in part or in whole, is not permitted unless authorised by Volkswagen AG. Volkswagen AG does not guarantee or accept any liability with respect to the correctness of information in this repair manual.

5.9 Button in Handle, Moving into Installation Position

⇒ "5.9.1 Handle with Side Button", page 85

⇒ "5.9.2 Handle with Front Button", page 85

5.9.1 Handle with Side Button

– Pull the button out of the handle just far enough until there is a small gap between the handle and the button. The button locks when released.

– Secure the button in this position with a cable tie or wire to prevent the button from being pressed in.

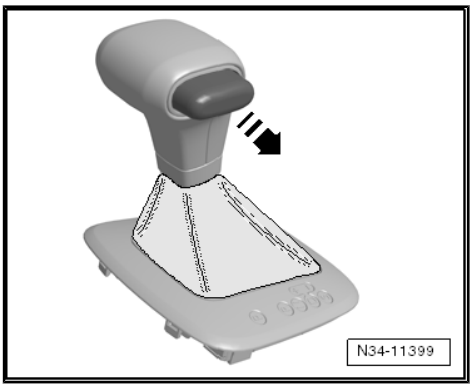

5.9.2 Handle with Front Button

The button cannot be pulled out on these handles.

There are two ways to move the button into the installation position, »with« or »without« the assembly fastener. Both possibilities are described here.

Move the Handle »with« an Assembly Fastener into the Installation Position:

When using an assembly fastener, make sure that it has an eye -arrow- at the front. Other assembly fasteners are not suitable.

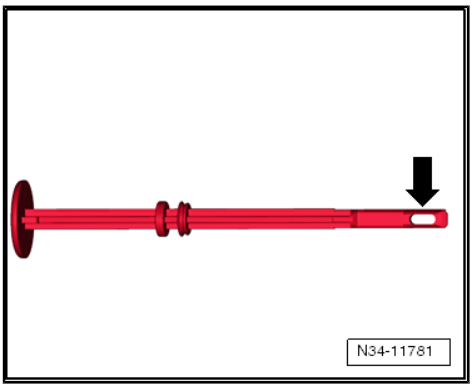

With the button pressed and push the assembly fastener (with the eye) -arrow- all the way in until it latches into the assembly fastener. Then release the button. The button locks into the installation position when the assembly fastener is pulled out.

Moving the Handle »without« an Assembly Fastener into the Installation Position:

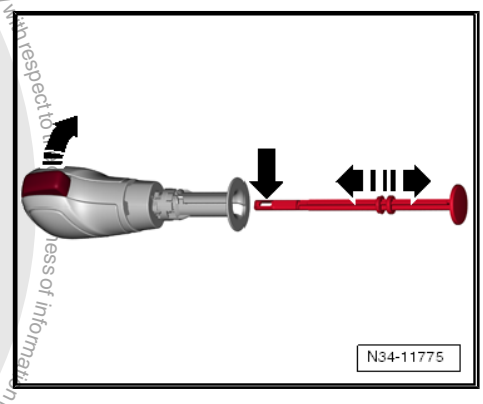

Protected by copyright. Copying for private or commercial purposes, in part or in whole, is not permitted unless authorised by Volkswagen AG. Volkswagen AG does not guarantee or accept any liability with respect to the correctness of information in this document. Copyright by Volkswagen AG.

– Carefully unclip the handle trim -A- upward.

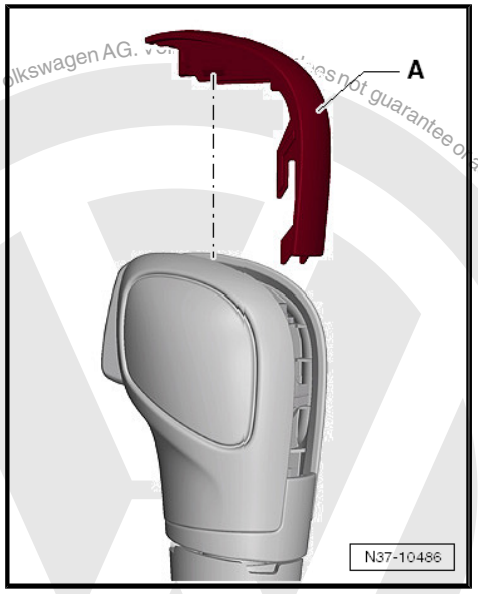

– Push the small lever -1- for the pull rod into the groove -2- with a screwdriver. This pushes the button -3- into the installation position.

-I- the button is in the pressed position

-II- the button is in the installation position

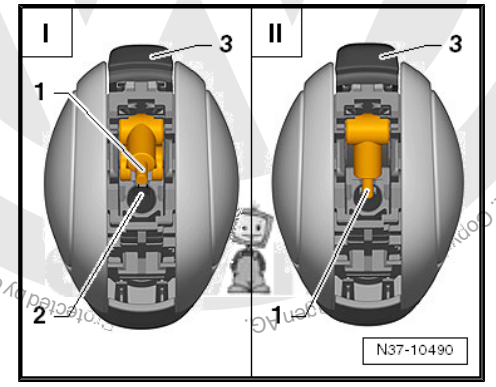

Note

- *Push the lever into the groove and no farther.*
- *Clip the handle trim back onto the selector mechanism only after the handle is installed. This way it is possible to see if the small lever engages into the pull rod when the button is pushed.*

5.10 Selector Mechanism, Checking

Do not operate the starter when the selector lever is in “R”, “D” and “S”.

If the selector lever position “N” is selected at speeds greater than km/h (3.1 mph), the shift lock solenoid must not engage and block the selector lever. The selector lever can be shifted into another gear.

When shifting into the selector lever position “N” at speeds below km/h (3.1 mph) (almost stopped), the shift lock solenoid may engage only after approximately one second. The selector lever can only be moved out of “N” when the brake pedal is pressed.

Selector Lever in “P” and the Ignition Turned On:

- If the brake pedal is not depressed:

The selector lever is locked and cannot be moved out of “P” when the button is pressed. The shift lock solenoid blocks the selector lever.

- If the brake pedal is depressed:

The shift lock solenoid releases the selector lever. It is possible to select a gear. Move the selector lever slowly from “P” through “S”; while doing this, check whether the selector lever position

Protected by copyright. Copying for private or commercial purposes, in part or in whole, is not permitted unless authorised by Volkswagen AG. Volkswagen AG does not guarantee or accept any liability with respect to the correctness of information in this document. Copyright by Volkswagen AG.

displayed in instrument cluster matches actual selector lever position.

Selector Lever in “N” and Ignition Switched On

- If the brake pedal is not depressed:

The selector lever is locked and cannot be moved out of “P” when the button is pressed. The shift lock solenoid blocks the selector lever.

- If the brake pedal is depressed:

The shift lock solenoid releases the selector lever. It is possible to select a gear.

Selector Level in the “tiptronic” Position

- Move the selector lever into the tiptronic gate:

The illuminated “D” symbol in the selector mechanism cover must turn off. The “+” and “-” must turn on.

The transmission range display in the instrument cluster must change from “P R N D S” to “6 5 4 3 2 1” when the selector lever is moved into the Tiptronic gate.

The Ignition and Lights Must Be Turned On

The respective symbol is being lit up in the selector mechanism cover.

Transmission Range Display

Simultaneous lighting of all segments on the transmission range display indicates the transmission is in emergency mode.

Protected by copyright. Copying for private or commercial purposes, in part or in whole, is not permitted unless authorised by Volkswagen AG. Volkswagen AG does not guarantee or accept any liability with respect to the correctness of information in this document. Copyright by Volkswagen AG.

6 Transmission, Removing and Installing, Jetta from MY 2005 , Golf Wagon from MY 2007 and Golf Wagon from MY 2010

⇒ “6.1 Transmission, Removing”, page 88 .

⇒ “6.2 Transmission, Installing”, page 97 .

⇒ “6.3 Tightening Specifications”, page 100 .

6.1 Transmission, Removing

Brief Description

The transmission is removed downward separately.

Remove the battery, the air filter and the starter »from above«. Coolant hoses are clamped off. Before removing the subframe mount, the engine and transmission must be supported.

»From underneath«:

The -subframe-, with the -pendulum support-, with the -steering gear- and with -both control arms- are removed together.

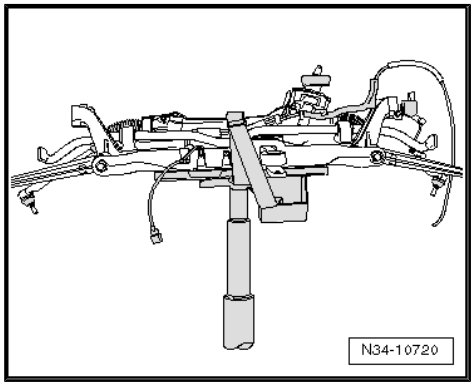

Removing the -subframe-. Refer to ⇒ Rep. Gr. 40 . If done correctly, the subframe can be removed and installed without the customer experiencing increased tire wear later. It is recommended to read this information »prior« to removing the transmission. In this way, -subframe- can be secured and removed correctly.

The Locating Pins - T10096- will be needed.

If the -subframe- is not secured by the pins, then later an axle alignment will be necessary.

In this case, an axle alignment is unnecessary and expensive additional work! It would be a lot of work and an unnecessary charge for the customer!

Installing the Locating Pins - T10096- is simple. It is very useful though.

Special tools and workshop equipment required

- Engine Support Bridge - 10-222A-
- Transmission Support - Mounting Plate 42A - 3282/42A-
- Engine Support Bridge - Engine Support Feet - 10-222A/8-
- Engine Support Bridge - Engine Support 3 - 10-222A/3-
- Transmission Support - 3282-
- Insert Tool - 18mm - T10179-
- Hose Clamps - Up To 40mm - 3093- (Quantity 2)
- or Hose Clamps - Up To 25 mm - 3094- (Quantity 2)
- Transmission Support - Pins 29 - 3282/29-
- Engine and Gearbox Jack - VAS6931-
- Engine Support Bridge - Gearbox Bracket - T10346-

Removing

– Move the selector lever into »P«.

Copyright by Volkswagen AG. Copying or publishing, in whole or in part, for commercial purposes, is prohibited unless authorised by VW. Vehicle manufacturer does not guarantee or accept any liability with respect to the correctness of information in this document.

Protected by copyright. Copying for private or commercial purposes, in part or in whole, is not permitted unless authorised by Volkswagen AG. Volkswagen AG does not guarantee or accept any liability with respect to the correctness of information.

Note

To perform work sequence, the ground cable must be disconnected from battery. Check if a coded radio is installed. If necessary, obtain the anti-theft coding beforehand.

– Disconnect the battery ground cable. Refer to ⇒ Electrical Equipment; Rep. Gr. 27 ; Battery; Battery, Disconnecting and Connecting .

– Remove the air filter housing.

♦ Gasoline engine. Refer to ⇒ Rep. Gr. 24 ; Air Filter; Air Filter Housing, Removing and Installing .

♦ TDI engine. Refer to ⇒ Rep. Gr. 23 ; Diesel Direct Injection System; Air Filter Housing, Removing and Installing .

– Remove the battery and the battery tray. Refer to ⇒ Electrical Equipment; Rep. Gr. 27 ; Battery; Battery, Removing and Installing .

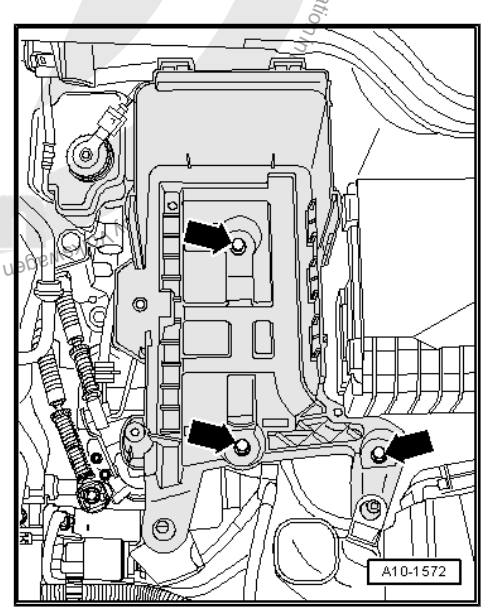

– Remove the selector lever cable from the transmission -arrows-.

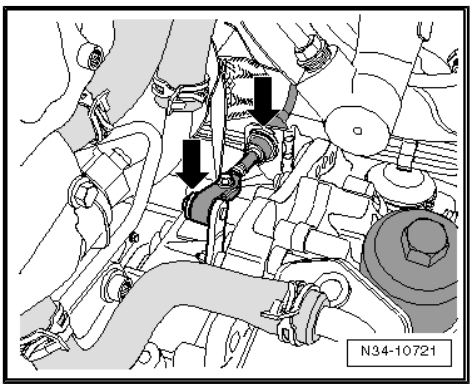

Note

Use pliers to remove the lock washer from the cable bracket. Do not use a sharp-edged lever. This could damage the selector lever cable rubber grommet.

Both lock washers must later be replaced when adjusting selector lever cable.

Remove the selector lever cable very carefully from the transmission cable bracket. Do not bend the selector lever cable at the same time.

The selector lever cable can also be slid back slightly from the cable bracket and later removed when lowering transmission. Watch the selector lever cable when lowering the transmission.

During later installation, only clip in the »new« lock washers after the selector lever cable has been checked and adjusted. Refer to ⇒ “5.5 Selector Lever Cable, Checking”, page 80 .

– Place a lint-free cloth on to transmission fluid cooler and transmission to absorb escaping coolant.

– Disconnect the coolant hoses with Hose Clamps - Up To 25mm - 3094- and remove them from the transmission fluid cooler.

– Seal the transmission fluid cooler with clean plugs.

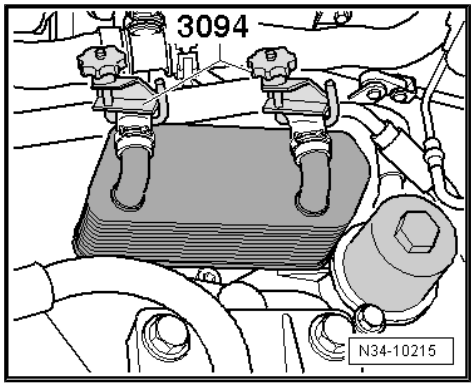

– Remove the starter -A-. Refer to ⇒ Electrical Equipment; Rep. Gr. 27 ; Starter; Starter, Removing and Installing .

Remove the »lower« starter bolt first.

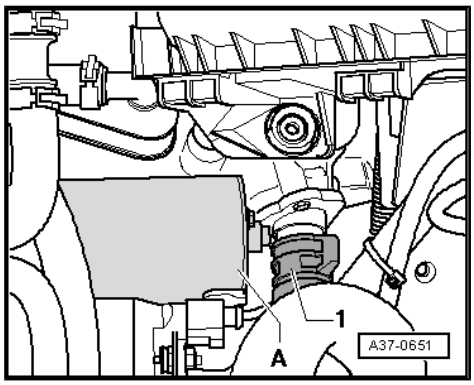

> **Caution**
>
> *There is a risk of damaging the DSG Transmission Mechatronic - J743- with static electricity.*
>
> ♦ *Do not touch contacts in DSG Transmission Mechatronic - J743- connector with hands.*

– To discharge any static electricity, touch the vehicle ground with hand (without wearing a glove). Refer to ⇒ "1.7 Electrical Components", page 5 .

– Turn the Mechatronic connector lock -1- »counter-clockwise« to release and disconnect the connector.

– Remove the wires and bracket from the front of the transmission cover -arrows- (two M6 nuts).

– Route the wires near the transmission cover upward and tie them up.

– Remove all the upper bolts between the engine and the transmission.

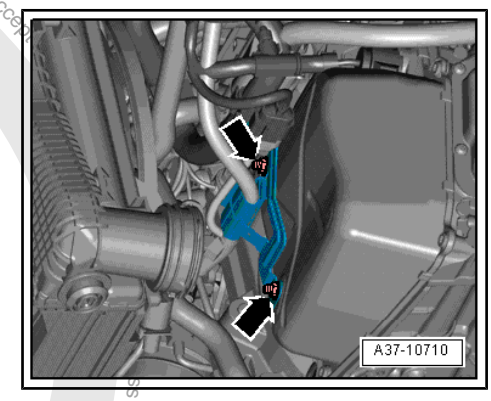

These tools are suitable for this.

Protected by copyright. Copying for private or commercial purposes, in part or in whole, is not permitted unless authorized by Volkswagen AG. Volkswagen AG does not guarantee or accept any liability with respect to the correctness of information in this document. Copyright by Volkswagen AG.

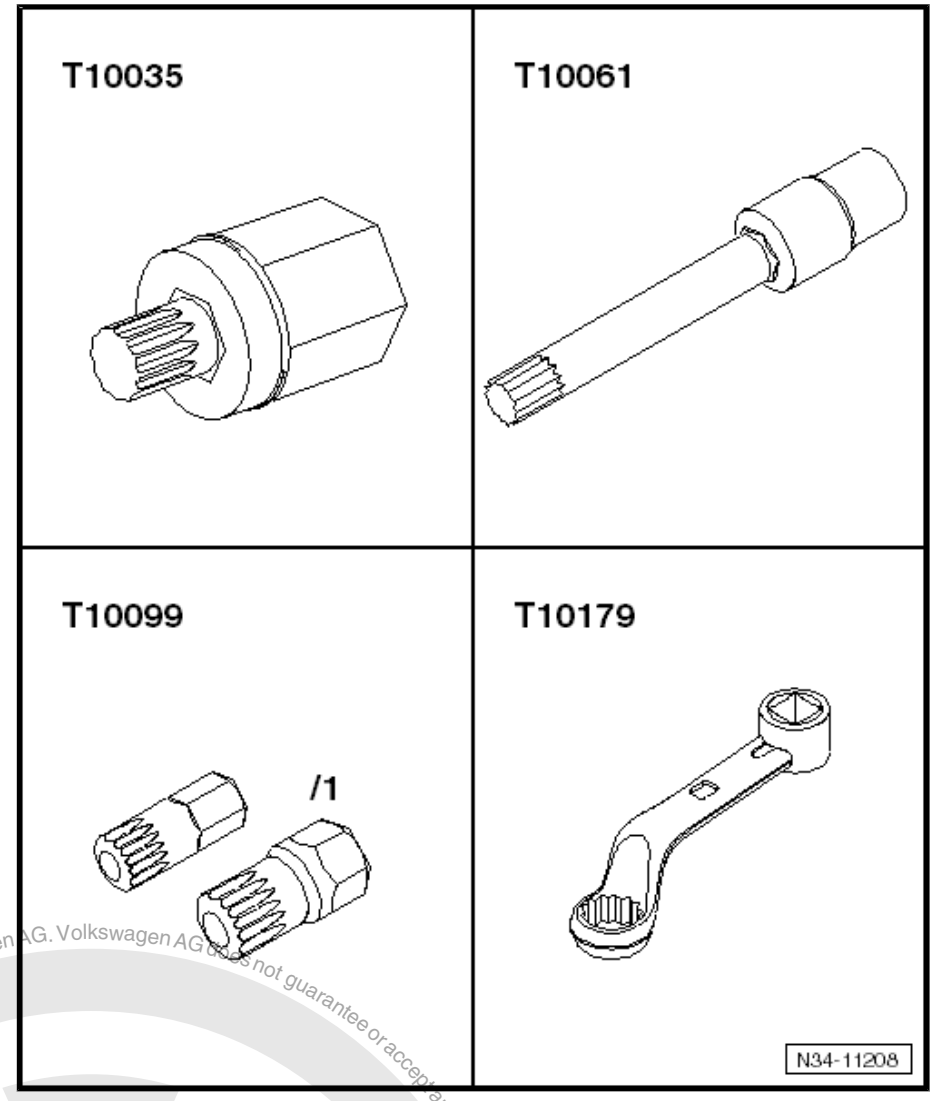

Note

On some transmissions a bolt is located in the starter hole -arrow-.

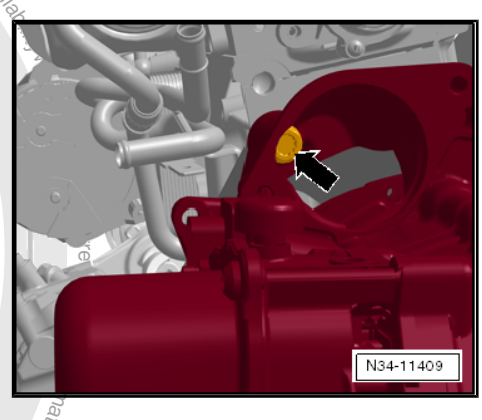

Remove both filler pieces from the left and right fender upper edges.

If there are hose and cable connections located near the engine lifting eyes for the Engine Support Bridge - 10-222A- , these must now be removed.

Check in following engine types which tool is needed to support the engine.

Protected by copyright. Copyright for private or commercial purposes, in part or whole, is not permitted unless authorised by Volkswagen AG. Volkswagen AG does not guarantee or accept any liability with respect to the correctness of information in this document. Copyright by Volkswagen AG.

Protected by copyright. Copying for private or commercial purposes, in part or in whole, is not permitted unless authorised by Volkswagen AG. Volkswagen AG does not guarantee or accept any liability with respect to the correctness of information in this document. Copyright by Volkswagen AG.

1.9L TDI Engine

– Support the engine and transmission. Do not raise them.

♦ Engine Support Bridge - 10-222A-

♦ Engine Support Bridge - Engine Support 3 - 10-222A/3-

♦ Engine Support Bridge - Engine Support Feet - 10-222A/8-

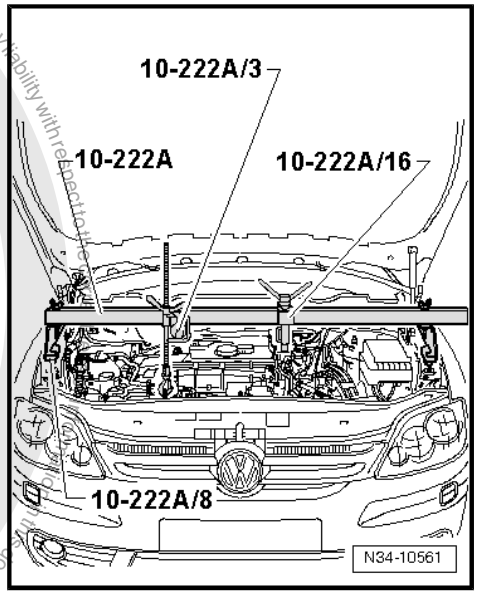

Engine Support - Automatic Transmission Adapter - 10-222A/16-

♦ Engine Support Bridge - Additional Hooks (2 pc.) - 10-222A/2-

♦ Engine/Gearbox Support Shackle (2 pc.) - 10-222A/12-

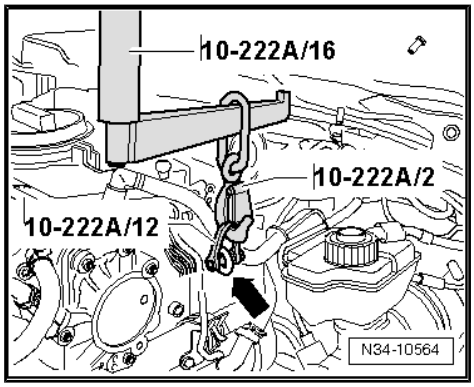

2.0L TDI Engine - Jetta from MY 2005 and Golf Wagon from MY 2007

– Support the engine and transmission. Do not raise them.

♦ Engine Support Bridge - 10-222A-

♦ Engine Support Bridge - Engine Support 3 - 10-222A/3-

♦ Engine Support Bridge - Engine Support Feet - 10-222A/8-

♦ Engine Support - Bracket w/Spindle and Hook - 10-222A/10-

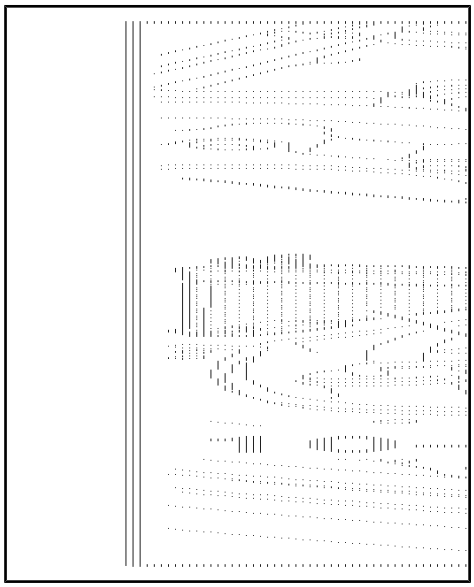

2.0L TDI Engine - Golf Wagon from MY 2010

– Support the engine and transmission. Do not raise them.

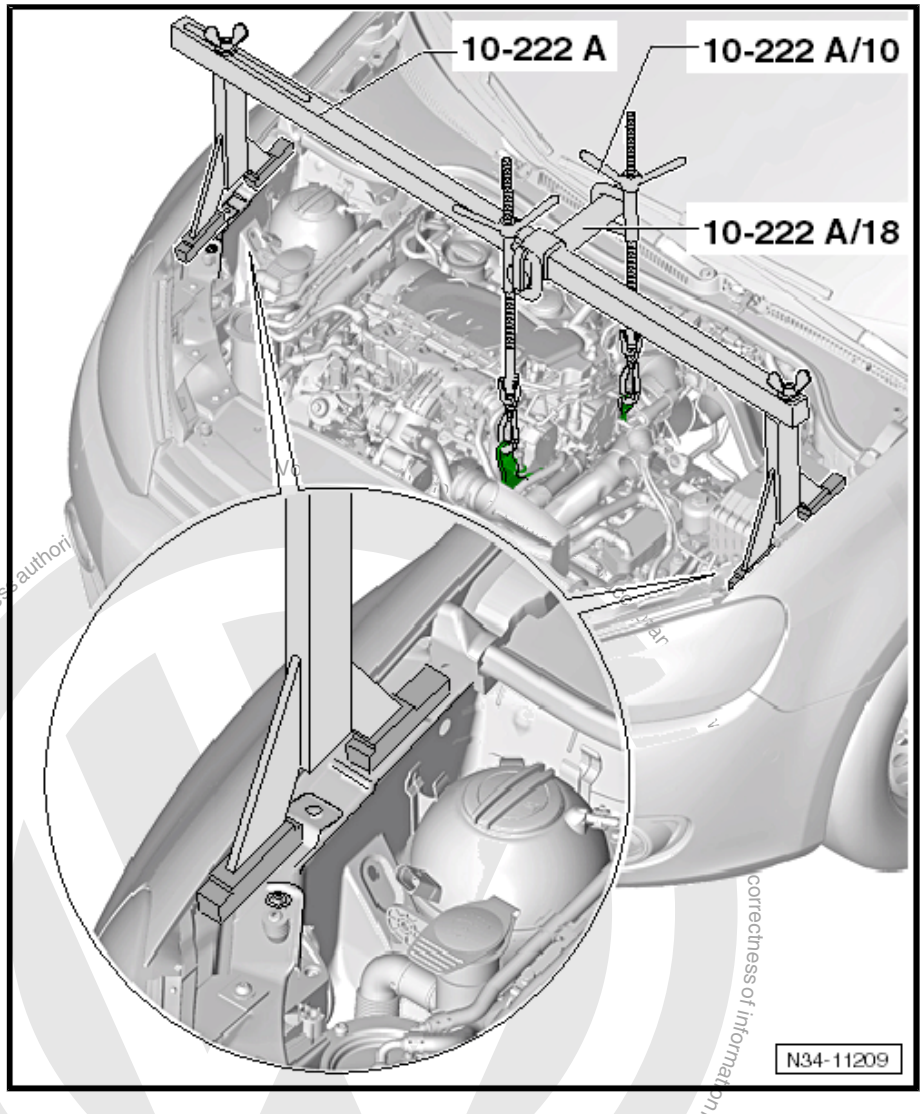

1.4L TSI Engine

– Support the engine and transmission. Do not raise them.

♦ Engine Support Bridge - 10-222A-

♦ Engine Support Bridge - Engine Support Feet - 10-222A/8-

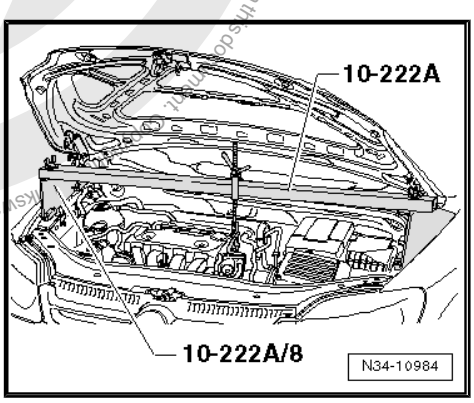

Protected by copyright. Copying for private or commercial purposes, in part or in whole, is not permitted unless authorised by Volkswagen AG. We do not guarantee the correctness of information in this document.

2.0L TFSI Engine

– Attach the Engine Support Bridge - Gearbox Bracket - T10346- to the rear hole of the three locating holes for the battery tray.

– Use a M6 collar bolt or one of the bolts for the battery tray.

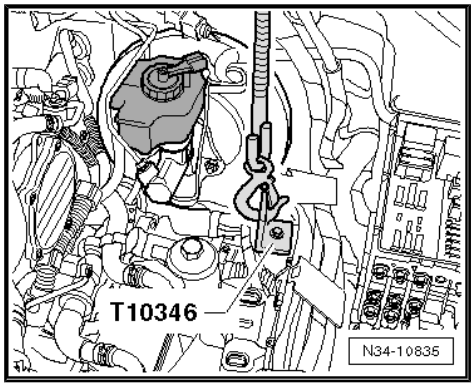

– Support the engine and transmission. Do not raise them.

♦ Engine Support Bridge - 10-222A-

♦ Engine Support Bridge - Engine Support 3 - 10-222A/3-

♦ Engine Support Bridge - Engine Support Feet - 10-222A/8- »flat side« toward engine compartment

♦ Engine Support Bridge - Gearbox Bracket - T10346-

♦ Use the Engine Support Bridge - Spindle Spacer - 10-222A/17- on the »front« spindle.

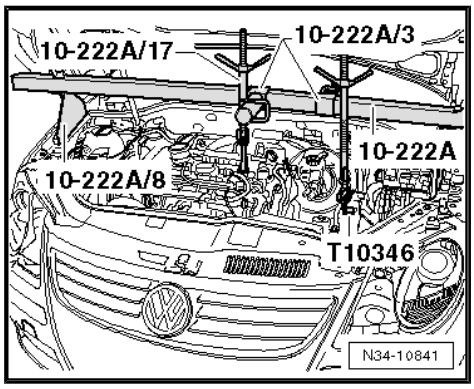

Continuation for All Engines

– Pretension the engine/transmission assembly with the spindles, but do not lift.

– Loosen left and right front wheel bolts.

– Lift the vehicle, all four mounts from lifting platform at the same height.

– Remove the front wheels.

– Remove the noise insulation. Refer to ⇒ Body Exterior; Rep. Gr. 50 ; Noise Insulation .

– Remove the lower section of the left front wheel housing liner. Refer to ⇒ Body Exterior; Rep. Gr. 66 ; Wheel Housing Liner; Overview - Front Wheel Housing Liner .

– Remove the heat shield above the right drive axle -arrows-, if equipped.

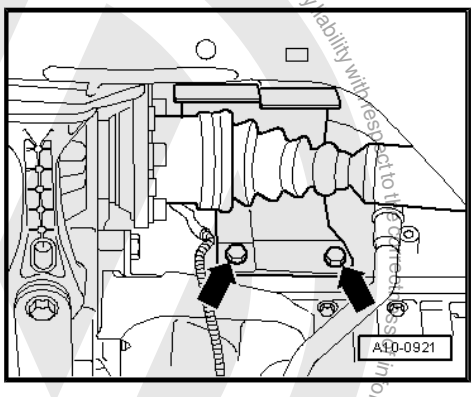

⚠ Caution

Risk of damaging the decoupling element.

♦ *Do not bend the decoupling element more than 10°.*

♦ *Do not load the decoupling element.*

♦ *Do not damage the wire mesh on the decoupling element.*

Protected by copyright. Copying for private or commercial purposes, in part or on whole, is not permitted unless authorised by Volkswagen AG. Volkswagen AG does not guarantee or accept any liability with respect to the correctness of information in this document. Copyright by Volkswagen AG.

– Disconnect the exhaust system at the clamping sleeve and remove the bracket for the exhaust system from the subframe -arrows-. Refer to ⇒ Rep. Gr. 26 .

– Tie up the front exhaust pipe.

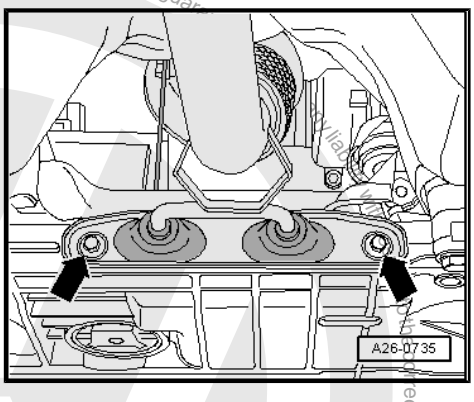

– Remove the pendulum support from the transmission.

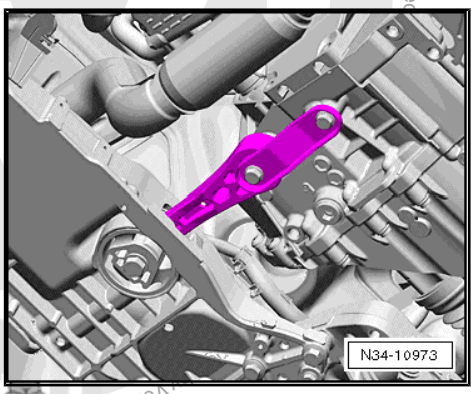

– Secure the subframe. Refer to ⇒ Suspension, Wheels, Steering; Rep. Gr. 40 ; Subframe; Subframe, Securing .

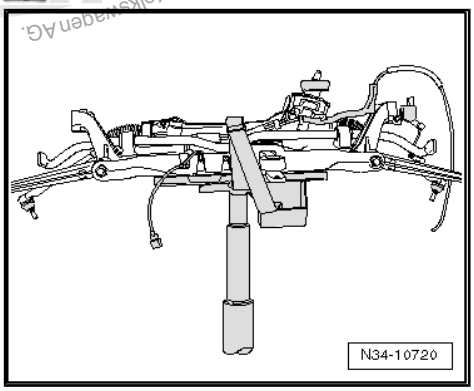

Note

If the -subframe- is not secured, a vehicle alignment must be performed later.

– Remove the subframe and steering gear. Refer to ⇒ Suspension, Wheels, Steering; Rep. Gr. 40 ; Subframe

– Remove the drive axles from the transmission. Refer to ⇒ Suspension, Wheels, Steering; Rep. Gr. 40 ; Drive Axles, Removing and Installing .

– Tie the right drive axle as high up as possible.

– Move the left drive axle to the rear and secure it. Be careful not to damage the surface protection.

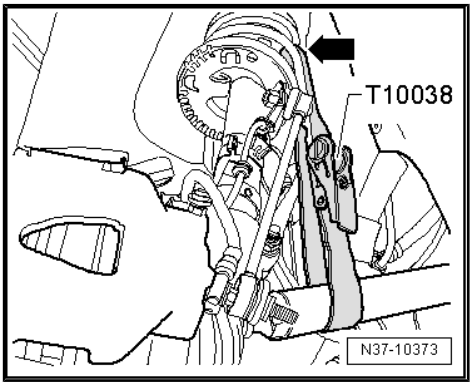

Protected by copyright. Copying for private or commercial purposes, in part or in whole, is not permitted unless authorised by Volkswagen AG. Volkswagen AG does not guarantee

– There may be a small cover plate on the plate between the engine and transmission above the right flange shaft. Remove the cover plate -A-.

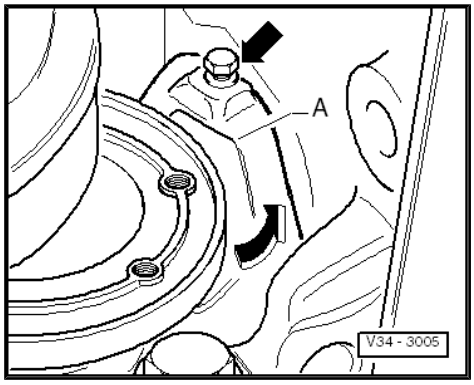

– Remove the bolts -1 and 2- from the transmission bracket -A-.

– Then lower the engine/transmission slightly using the Engine Support Bridge - 10-222A- spindles so that the transmission bracket can be removed.

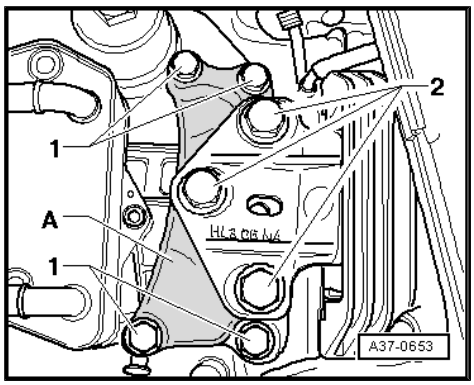

– Remove the transmission bracket in direction of -arrow-.

To remove the transmission 02E, the Transmission Support - 3282- is equipped with the Transmission Support - Mounting Plate - 3282/42A- and positioned on the Engine and Gearbox Jack - VAS6931- .

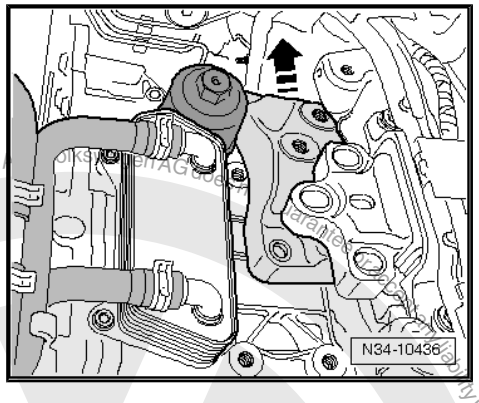

Protected by copyright. Copying for private or commercial purposes, in part or in whole, is not permitted unless authorised by Volkswagen AG. Volkswagen AG does not guarantee or accept any liability with respect to the correctness of information in this document. Copyright by Volkswagen AG.

– Align the arms of the Transmission Support so that they match up with the holes in the Transmission Support - Mounting Plate 42A - 3282/42A- .

– Install the mounting element as illustrated on the Transmission Support - Mounting Plate 42A - 3282/42A- .

– Place the Engine and Gearbox Jack - VAS6931- under the vehicle.

• The arrow symbol on the Transmission Support - Mounting Plate 42A - 3282/42A- points in the direction of travel.

– Align the Transmission Support - 3282- so that it is parallel to the transmission.

– Install the Transmission Support - Pins 29 - 3282/29- in the transmission.

– Secure both the other support elements to the transmission as shown.

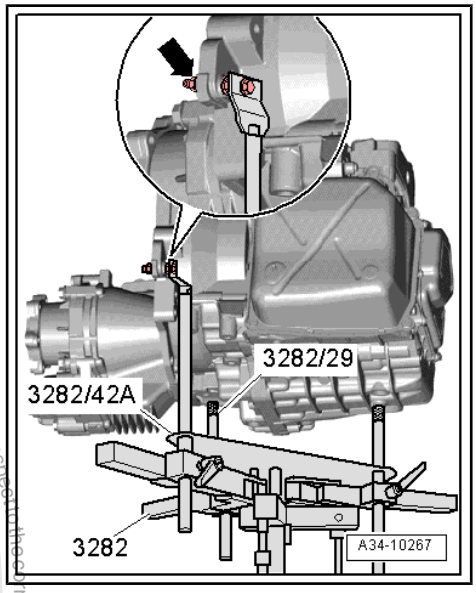

Note

♦ *Deviating from the illustration of the Adjusting Plate the front transmission support is illustrated mounted to the transmission -arrow-.*

♦ *DSG® transmission 02E "AWD" is shown in the illustration. The mounting elements on the "FWD" are identical.*

– Support the transmission by lifting it from underneath using the Engine and Gearbox Jack - VAS6931- .

The transmission is disconnected from the engine in this position.

– Remove the remaining engine/transmission connecting bolts.

– Remove transmission from engine »while being careful of selector lever cable« and lower the transmission.

Note

Pay attention to all of the lines when lowering the transmission.

Transport the transmission and secure to the assembly stand. Refer to
⇒ "8 Transmission, Transporting and Securing to Assembly Stand", page 131 .

Install the transmission. Refer to
⇒ "6.2 Transmission, Installing", page 97 .

6.2 Transmission, Installing

Install in reverse order of removal. Nevertheless, important steps should be named here:

Volkswagen AG. Volkswagen AG does not authorised by Volkswagen AG. Volkswagen AG does not guarantee or accept any liability with respect to the correctness of information in this document. Copyright by Volkswagen AG. Copying for private or commercial purposes, in part or in whole, is not permitted unless authorised by Volkswagen AG.

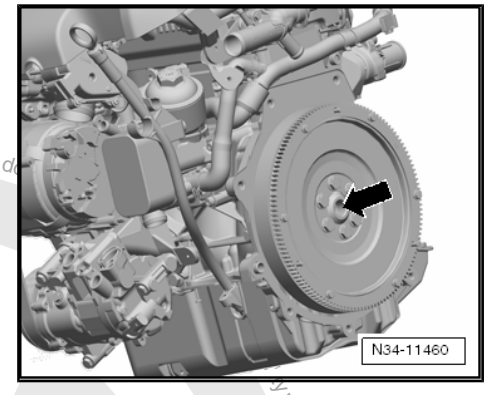

Note

- *Always replace the needle bearing -arrow- after separating the engine and transmission.*
- *If the needle bearing in the crankshaft is damaged, the gears will no longer shift correctly.*

– Replace the needle bearing in the crankshaft. Refer to ⇒ Rep. Gr. 13 ; Crankshaft; Needle Bearing in Crankshaft, Replacing .

– Transmission pins (not splines) on the driveshaft must also be lightly lubricated.

– Make sure both alignment sleeves between the engine and the transmission are correctly seated.

– Make sure the intermediate plate fits correctly.

– Guide the selector lever cable into the cable bracket as soon as possible.

Check the selector lever cable when raising the transmission. Do not fail to place it in the cable mounting bracket »early«.

Do not grease the selector lever cable.

Guide the engine and transmission together by hand until the engine flange and transmission flange come into contact with one another all around.

If they do not, »something is incorrect«!

– Adjust the transmission mount until the engine and transmission »are in alignment«.

– Turn the crankshaft slightly if necessary.

– Insert the transmission without pinching any lines.

– Attach the transmission to the engine. Transmission to engine tightening specifications. Refer to
⇒ “6.3 Tightening Specifications”, page 100 .

Protected by copyright. Copying for private or commercial purposes, in part or in whole, is not permitted unless authorised by Volkswagen AG. Volkswagen AG does not guarantee or accept any liability with respect to the correctness of information in this document. Copyright by Volkswagen AG.

Install the left subframe mount as follows:

– Replace all bolts -1 and 2- for the left subframe mount.
– Install all new bolts first by hand.
– Fasten the transmission bracket -A- to the transmission using the bolts -1-.
– The align the engine/transmission in its installation position. Lift until the transmission bracket is touching the transmission mount completely.

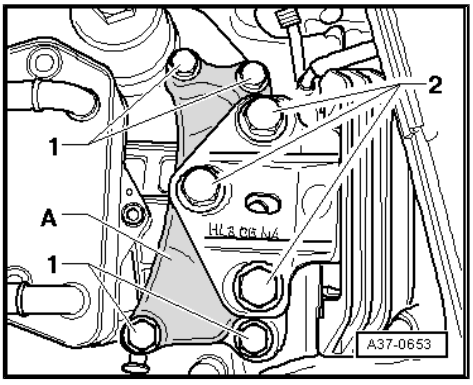

Caution

There is a risk of damaging the threads in transmission bracket by inserting the bolts at an angle.

- *Before installing the bolts -2-, the transmission bracket and transmission mount support arm must be absolutely parallel to each other. If necessary, lift the back of the transmission using the Engine and Gearbox Jack .*

Install the engine/transmission mount without tension. Refer to ⇒ Rep. Gr. 10 .

– Tighten the bolts -2- to the tightening specification.

WARNING

Only remove the Engine Support Bridge - 10-222A- when all the left and right subframe mount bolts are tightened to the tightening specification.

– Remove the Engine Support Bridge - 10-222A- .
– Install the starter. Refer to ⇒ Electrical Equipment; Rep. Gr. 27; Starter; Starter, Removing and Installing .

Connect the connector -A- from the DSG Transmission Mechatronic - J743- as follows.

– The arrow -D- on the DSG Transmission Mechatronic - J743- -B- must line up with the connector -A- as well as with the tab -C-.
– Connect the connector -A- carefully all the way and then turn the lock »clockwise« in the direction of -arrow-.

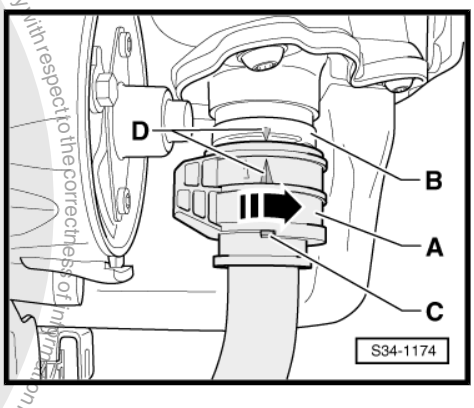

Protected by copyright. Copying for private or commercial purposes, in part or in whole, is not permitted unless authorised by Volkswagen AG. Volkswagen AG does not guarantee or accept any liability with respect to the correctness of information in this document. Copyright by Volkswagen AG.

– Selector lever cable lock washers -arrows- must be replaced.

– Always adjust the selector lever cable. Refer to ⇒ “5.6 Selector Lever Cable, Adjusting”, page 80 .

– Check the coolant level and fill if necessary. Refer to ⇒ Rep. Gr. 19 ; Cooling System Components .

– Attach the drive axles to the transmission. Refer to ⇒ Suspension, Wheels, Steering; Rep. Gr. 40 ; Drive Axles, Removing and Installing .

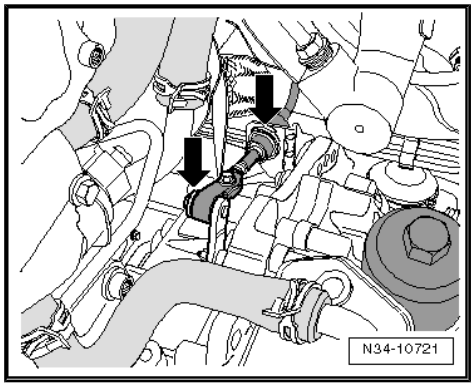

– Install the heat shield above the right drive axle, if equipped. At the same time tighten the bolts -1- to 25 Nm.

– Install the subframe and steering gear. Refer to ⇒ Suspension, Wheels, Steering; Rep. Gr. 40 ; Subframe

– Attach the pendulum support to the transmission using new bolts. Refer to ⇒ Rep. Gr. 10 .

– Assemble the exhaust system and install the exhaust system bracket to the subframe. Refer to ⇒ Rep. Gr. 26 .

– Install the lower section of the left front wheel housing liner. Refer to ⇒ Body Exterior; Rep. Gr. 66 ; Wheel Housing Liner; Overview - Front Wheel Housing Liner .

– Install the noise insulation. Refer to ⇒ Body Exterior; Rep. Gr. 50 ; Noise Insulation .

– Install the battery tray and the battery. Refer to ⇒ Electrical Equipment; Rep. Gr. 27 ; Battery; Battery, Removing and Installing .

– Install the air filter housing.

♦ Vehicles with a gasoline engine. Refer to ⇒ Rep. Gr. 24 ; Air Filter; Air Filter Housing, Removing and Installing .

♦ Vehicles with a diesel engine. Refer to ⇒ Rep. Gr. 23 ; Diesel Direct Injection System; Air Filter Housing, Removing and Installing .

– Install the front wheels. Refer to ⇒ Suspension, Wheels, Steering; Rep. Gr. 44 ; Wheel Installation Tightening Specifications .

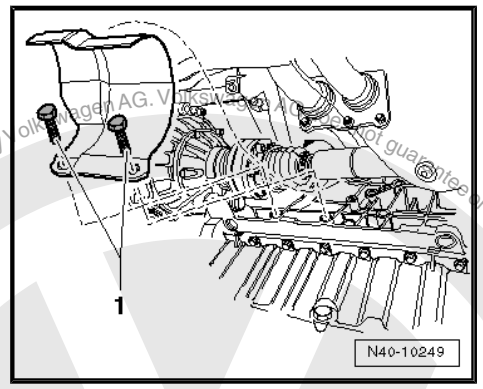

6.3 Tightening Specifications

Engines: 1.9L TDI; 2.0L TDI; 2.0L TFSI

Note

The -arrows- point to the alignment sleeves in the engine.

Protected by copyright. Copyright by Volkswagen AG.

M12 - 80 Nm

- ❑ When using the Insert Tool - 18mm - T10179- : 65 Nm.

M10 - 40 Nm

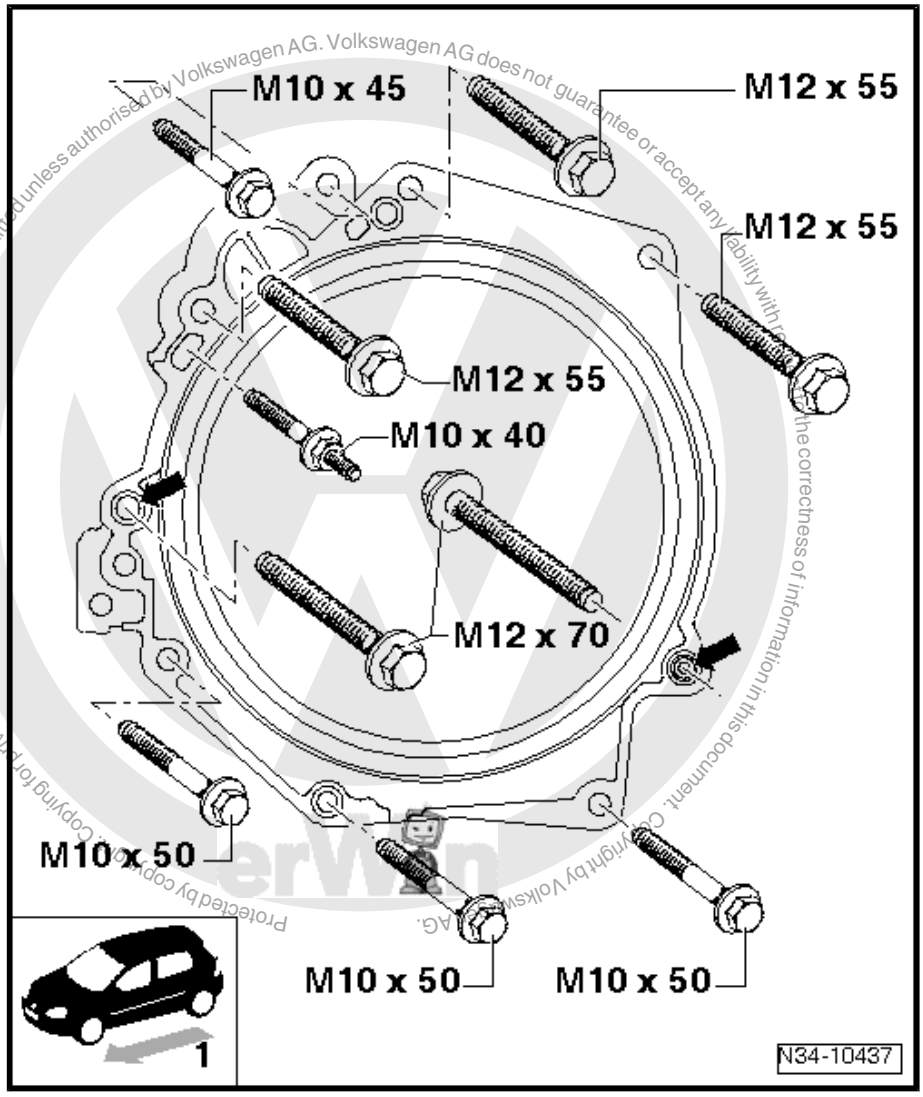

Protected by copyright. Copying for private or commercial purposes, in part or in whole, is not permitted unless authorised by Volkswagen AG. Volkswagen AG does not guarantee or accept any liability with respect to the correctness of information in this document. Copyright by Volkswagen AG.

Continuation for All Engines

- Replace all bolts -1 and 2- for the left subframe mount.
- Install all new bolts first by hand.
- Tighten the transmission bracket -A- to the transmission to 40 Nm + 90° using the bolts -1-.
- Tighten the bolts -2- to 60 Nm + 90°.

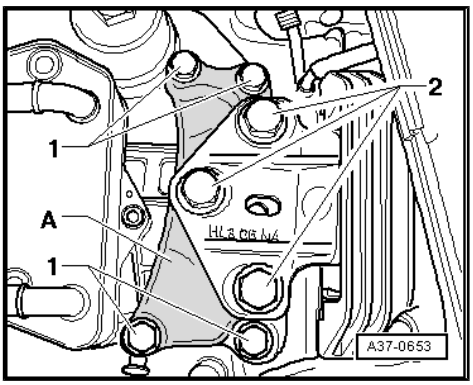

Note

Pry the transmission bracket into the correct seat using a screw-driver while tightening the bolts -2-.

Copyright by Volkswagen AG. Volkswagen AG does not guarantee or accept any liability with respect to the correctness of information in this document. Copyright by Volkswagen AG. Copying for private or commercial purposes, in part or in whole, is not permitted unless authorised by Volkswagen AG.

7 Transmission, Removing and Installing, Jetta from MY 2011

⇒ "7.1 Transmission, Removing, Jetta MY 2011 with 2.0L 103 kW Diesel", page 102 .

⇒ "7.2 Transmission, Installing, Jetta MY 2011 with 2.0L 103 kW Diesel", page 113 .

⇒ "7.3 Transmission, Removing, Jetta MY 11, 2.0L 147 kW Gasoline Engine", page 115 .

⇒ "7.4 Transmission, Installing, Jetta MY 11, 2.0L 147 kW Gasoline Engine", page 127 .

⇒ "7.5 Tightening Specifications", page 129 .

7.1 Transmission, Removing, Jetta MY 2011 with 2.0L 103 kW Diesel

Brief Description

The transmission is removed downward separately.

»From above«:

The battery, air filter and starter are removed. The steering gear wiring harness is disconnected and »freed up«. This way it can be lowered together with the subframe and the steering gear. Engine and transmission are supported before the left subframe mount is removed.

»From underneath«:

The -subframe-, with the -pendulum support-, with the -steering gear- and with -both control arms- are removed together.

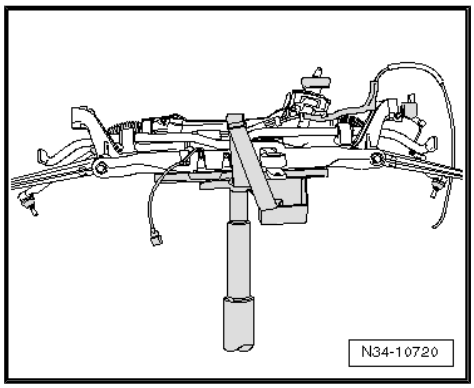

Removing the -subframe-. Refer to ⇒ Rep. Gr. 40 . If done correctly, the subframe can be removed and installed without the customer experiencing increased tire wear later. It is recommended to read this information »prior« to removing the transmission. In this way, -subframe- can be secured and removed correctly.

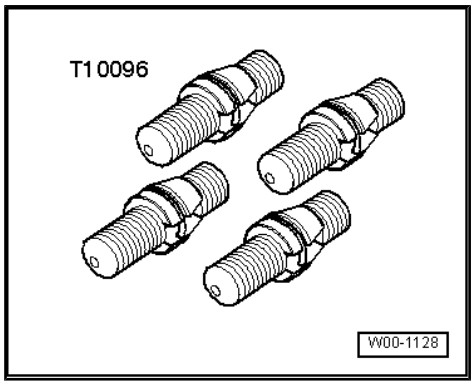

Locating Pins - T10096- and Subframe Locking Pin (2 pc.) - T10452- will be needed.

If the -subframe- is not secured by the pins, then later an axle alignment will be necessary.

In this case, an axle alignment is unnecessary and expensive additional work! It would be a lot of work and an unnecessary charge for the customer!

Installing the Locating Pins - T10096- and Subframe Locking Pin (2 pc.) - T10452- is simple. It is very useful though.

Special tools and workshop equipment required

- Transmission Support - 3282-

- Transmission Support - Mounting Plate 42A - 3282/42A-
- Transmission Support - Pins 29 - 3282/29-
- Torque Wrench 1331 5-50Nm - VAG1331-
- Torque Wrench 1332 40-200Nm - VAG1332-
- Engine and Gearbox Jack - VAS6931-
- Engine Support Bridge - 10-222A-
- Hose Clamps - Up To 25mm - 3094- or Hose Clamps - Up To 40mm - 3093-
- Tensioning Strap - T10038-
- Engine Support - Basic Set - T40091-
- Engine Support - Supplement Kit - T40093A-
- Engine Bung Set - VAS6122-

Removing

– Move the selector lever into »P«.

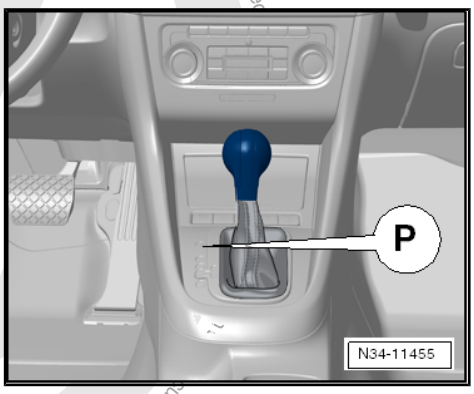

Note

To perform work sequence, the ground cable must be disconnected from battery. Check if a coded radio is installed. If necessary, obtain the anti-theft coding beforehand.

– Disconnect the battery ground cable. Refer to ⇒ Electrical Equipment; Rep. Gr. 27 ; Battery; Battery, Disconnecting and Connecting .

– Remove the engine cover. Refer to ⇒ Rep. Gr. 15 ; Cylinder Head; Engine Cover, Removing and Installing .

– Remove the complete air filter housing. Refer to ⇒ Rep. Gr. 23 ; Diesel Direct Injection System; Overview - Air Filter .

– Remove the battery and the battery tray. Refer to ⇒ Electrical Equipment; Rep. Gr. 27 ; Battery; Battery, Disconnecting and Connecting .

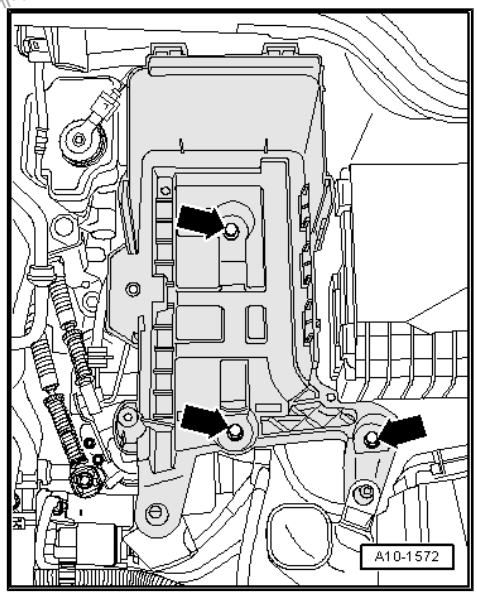

Volkswagen AG. Volkswagen AG does not guarantee or accept any liability with respe
Copyright by Volkswagen AG. Distributed by copyright. Private or commercial use is not permitted without the consent of Volkswagen AG.

– Remove the selector lever cable from the transmission -arrows-.

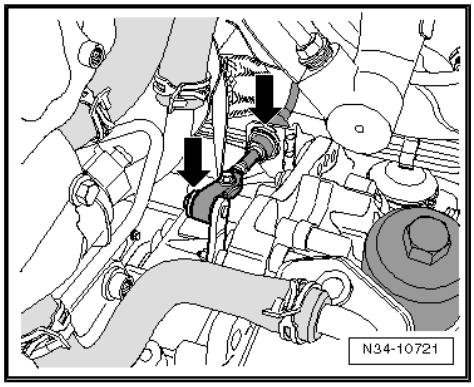

Note

- *Use pliers to remove the lock washer from the cable bracket. Do not use a sharp-edged lever. Otherwise the selector lever cable could get damaged.*
- *Remove the cable bracket -2- from the transmission, if necessary. Remove the bolts -1- and the lock washer -3-.*
- *Replace the bolts -1- and the lock washers.*
- *Bolt tightening specification -1- 20 Nm +90°.*

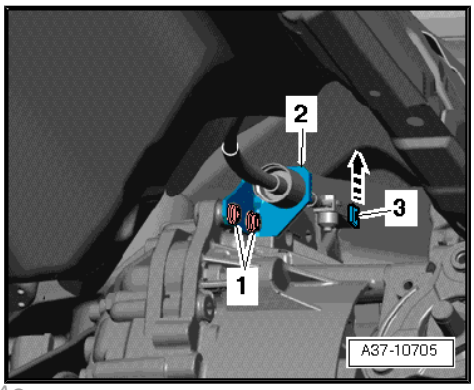

Caution

Risk of damaging the selector lever cable.

- ***Remove the selector level cable from the cable bracket when lowering transmission.***
- ***Do not bend or kink the selector lever cable.***

– Place a lint-free cloth on to transmission fluid cooler and transmission to absorb escaping coolant.

Note

- *The cooling system is under pressure when the engine is warm.*
- *Cover the coolant reservoir cap with a cloth and open it carefully before removing the coolant hoses.*

– Clamp the coolant hoses with Hose Clamps - Up To 25mm - 3094- or Hose Clamps - Up To 40mm - 3093- and remove the hoses from the transmission fluid cooler.

– Seal off the transmission fluid cooler connections with sealing plugs taken from for example the Engine Bung Set - VAS6122- .

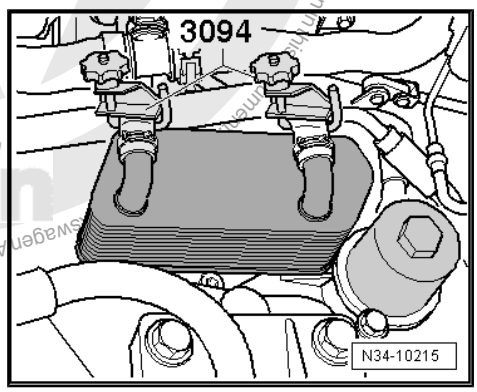

Protected by copyright. Copying for private or commercial purposes, in part or in whole, is not permitted unless authorised by Volkswagen AG. Volkswagen AG does not guarantee or accept any liability with respect to the correctness of information

– Remove the starter -A-. Refer to ⇒ Electrical Equipment; Rep. Gr. 27 ; Starter; Starter, Removing and Installing .

Remove the »lower« bolt first.

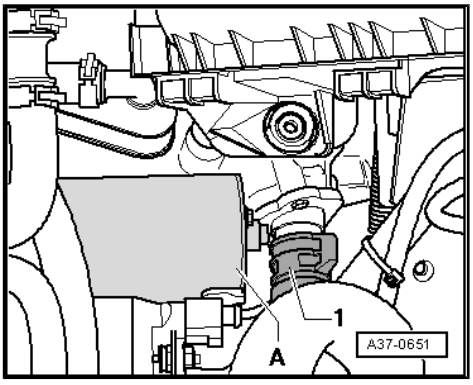

> **Caution**
>
> *There is a risk of damaging the DSG Transmission Mechatronic - J743- with static electricity.*
>
> ♦ *Do not touch contacts in DSG Transmission Mechatronic - J743- connector with hands.*

– To discharge any static electricity, touch the vehicle ground with hand (without wearing a glove). Refer to ⇒ “1.7 Electrical Components”, page 5 .

– Turn the Mechatronic connector lock -1- »counter-clockwise« to release and disconnect the connector.

– Remove the wires and bracket from the front of the transmission cover -arrows- (two M6 nuts).

– Route the wires near the transmission cover upward and tie them up.

– Remove all the upper bolts between the engine and the transmission.

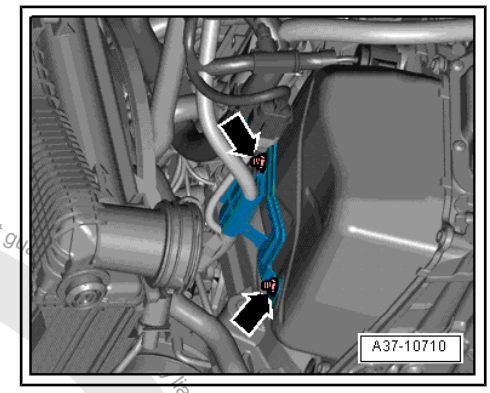

These tools are suitable for this.

Protected by copyright. Copyright by Volkswagen AG. Copying for private or commercial purposes, in part or in whole, is not permitted unless authorised by Volkswagen AG. Volkswagen AG does not guarantee or accept any liability with respect to the correctness of information in this document.

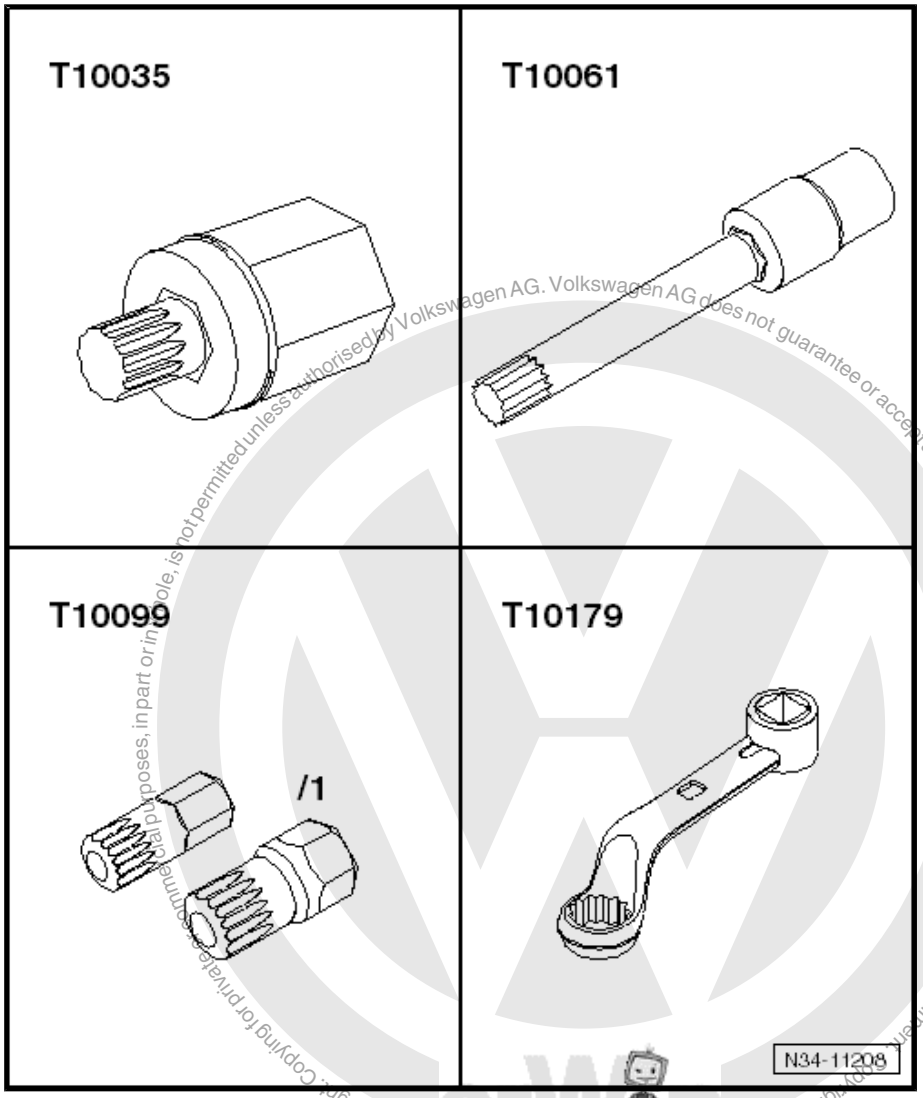

One bolt is located inside the hole for the starter -arrow-. Use Socket - Xzn 14 - T10061- to remove the bolt.

– Remove the plenum chamber cover. Refer to ⇒ Body Exterior; Rep. Gr. 50 ; Plenum Chamber Cover; Plenum Chamber Cover, Removing and Installing .

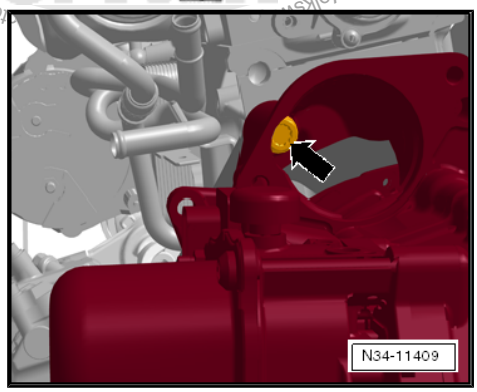

Protected by copyright. Copying for private or commercial purposes, in part or in whole, is not permitted unless authorised by Volkswagen AG. Volkswagen AG does not guarantee or accept any liability with respect to the correctness of information in this document. Copyright by Volkswagen AG.

– Remove the bolts -arrows- for the left and right lock carrier retaining brackets.

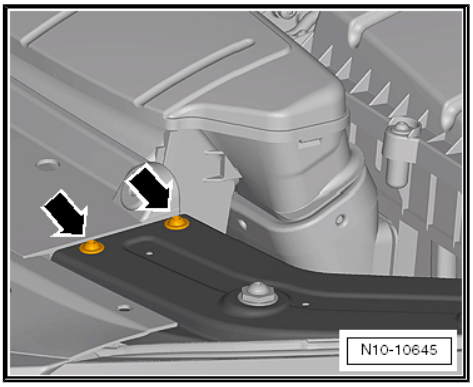

– Remove the lower mounts on the Engine Support Bridge - Engine Support 28 - 10-222A/28- and replace them with the Engine Support Bridge - Engine Support 28-2 - 10-222A/28-2- .

– Remove the bolts -arrows- for securing the engine support bridge on the lock carrier from the Engine Support Bridge - Engine Support 28-2 - 10-222A/28-2- .

• Use the bolts present in the Engine Support Bridge - Engine Support 28-2 - 10-222A/28-2- for attaching the Engine Support Bridge - Engine Support 28 - 10-222A/28- . Not the bolts for the retaining bracket.

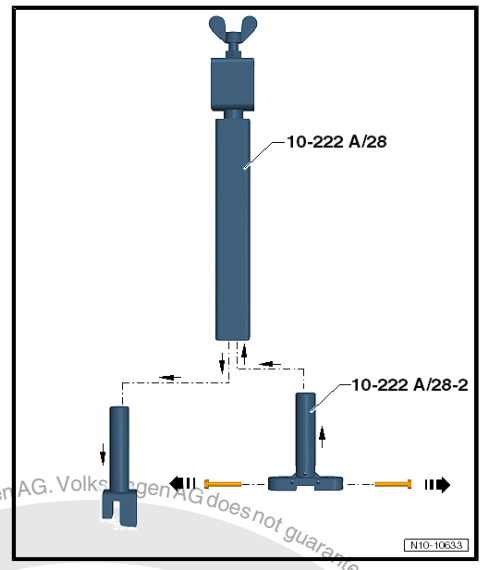

– Install the Engine Support Bridge - Engine Support 28 - 10-222A/28- and tighten the bolts to 8 Nm -arrows-.

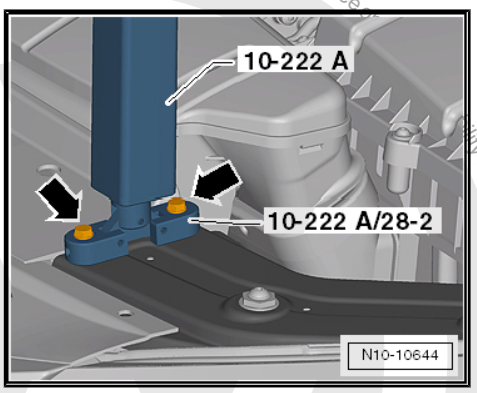

> ⚠ **Caution**
>
> ***A second technician is needed to mount the Engine Support Bridge on the vehicle to prevent the Engine Support Bridge from tipping.***

– If there are hose and cable connections located near the engine lifting eyes for the Engine Support Bridge - 10-222A- , these must now be removed.

Install the Engine Support Bridge - 10-222A- as shown.

– First slide the Moveable Joints -2- onto the Square Pipe from the Engine Support Bridge - 10-222A-.

– Mount the Engine Support Bridge - 10-222A- on the suspension strut towers and have a second technician hold it to prevent it from tipping.

– Push the Engine Support - Basic Set - Square Pipe - T40091/1- - 6- from the front left and right through the Engine Support Bridge - Engine Support 28 - 10-222A/28- - 7- and place on each side of the Engine Support - Supplement Kit - Movable Joint - T40093/4- - 5-.

– Slide the Engine Support - Basic Set - Rail with Holes - T40091/2- - 4- with the Engine Support - Supplement Kit -

Protected by copyright. Copyright for private or commercial purposes, in part or in whole, is not permitted unless authorised by Volkswagen AG. Volkswagen AG does not guarantee or
Copyright by Volkswagen AG.

Mount - T40093/5- -9- in the Engine Support - Supplement Kit - Moveable Joint - T40093/4- - 5-.

– Install the locking pins into the Engine Support - Basic Set - Rail with Holes - T40091/2- -4- and secure it with the cotter pins.

1 - Engine Support Bridge - Engine Support 31 - Adapter 2 - 10-222A/31-2-

2 - Engine Support - Basic Set - Moveable Joint - T40091/3-

3 - Engine Support Bridge - Engine Support 31 - Adapter 1 - 10-222A/31-1-

4 - Engine Support - Basic Set - Rail with Holes - T40091/2-

5 - Engine Support - Supplement Kit - Movable Joint - T40093/4-

6 - Engine Support - Basic Set - Square Pipe - T40091/1-

7 - Engine Support Bridge - Engine Support 28 - 10-222A/28- with Engine Support Bridge - Engine Support 28-2 - 10-222A/28-2-

8 - Engine Support Bridge - Spindle - 10-222A/11-

9 - Engine Support - Supplement Kit - Mount 5 - T40093/5-

10 - Engine Support - Bracket w/Spindle and Hook - 10-222A/10-

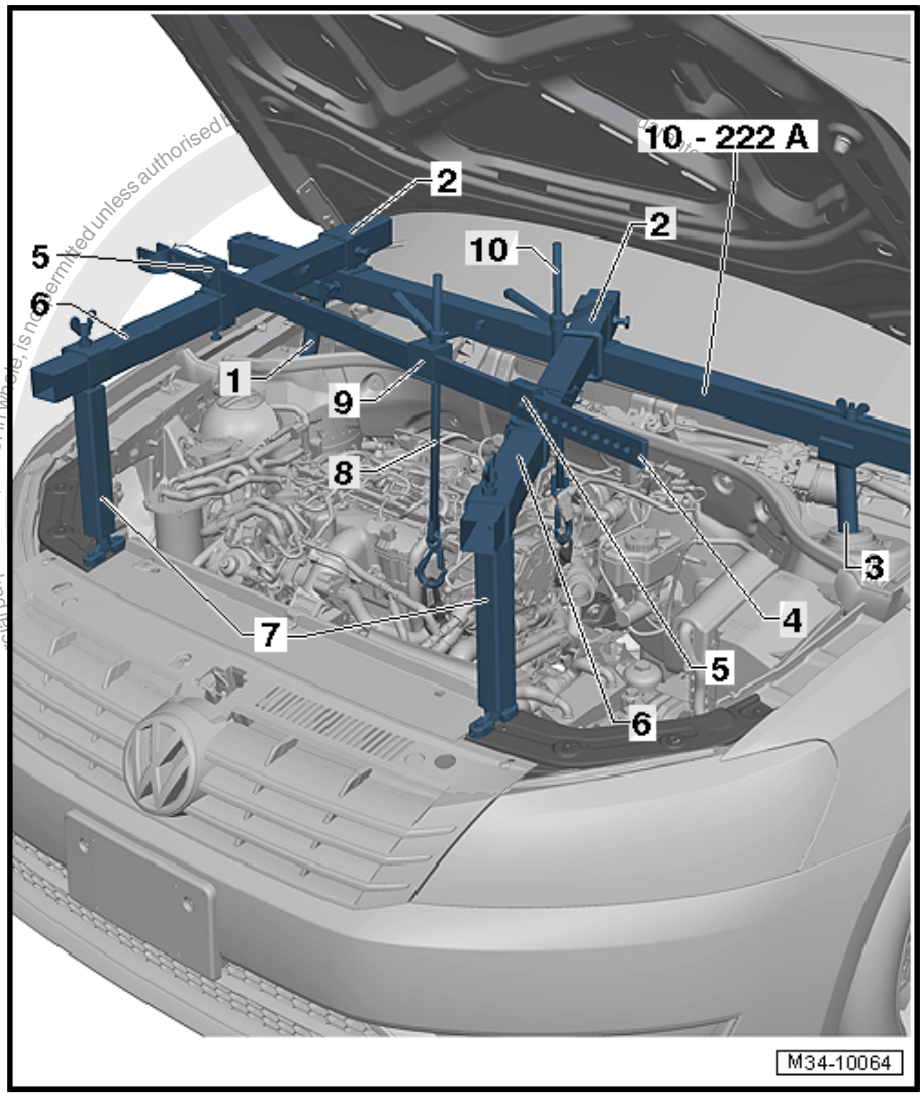

– Tighten all the threaded connections on the Engine Support Bridge - 10-222A- hand-tight. While doing so, adjust the height of the Engine Support Bridge - 10-222A- parallel over the Engine Support Bridge - Engine Support 28 - 10-222A/28- .

– Pretension the engine/transmission assembly with the spindles, but do not lift.

– Loosen left and right front wheel bolts.

– Lift the vehicle, all four mounts from lifting platform at the same height.

– Remove the front wheels.

– Remove the noise insulation. Refer to ⇒ Body Exterior; Rep. Gr. 50 ; Noise Insulation .

– Remove the left front housing liner. Refer to ⇒ Body Exterior; Rep. Gr. 66 ; Wheel Housing Liner; Overview - Front Wheel Housing Liner .

Caution

Risk of damaging the decoupling element.

- *Do not bend the decoupling element more than 10°.*
- *Do not load the decoupling element.*
- *Do not damage the wire mesh on the decoupling element.*

– Separate the exhaust system at the clamping sleeve and remove the bracket from the subframe -arrows-. Refer to ⇒ Rep. Gr. 26 .

– Tie up the front exhaust pipe.

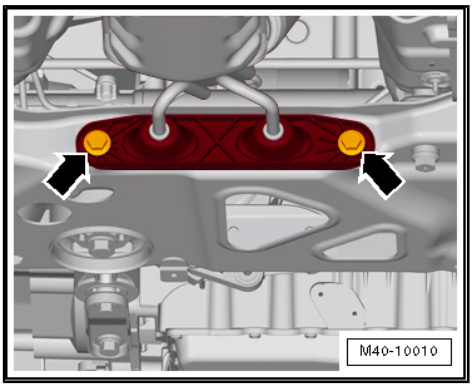

– Remove the bolts -11- and then remove the pendulum support from the transmission.

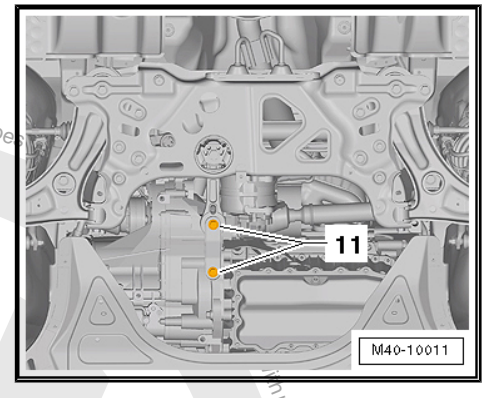

– Secure the subframe before removing. Refer to ⇒ Suspension, Wheels, Steering; Rep. Gr. 40 ; Subframe; Subframe, Securing .

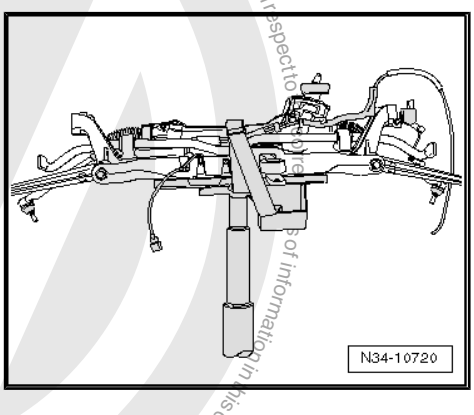

Note

If the -subframe- is not secured, a vehicle alignment must be performed later.

– Remove the subframe and steering gear. Refer to ⇒ Suspension, Wheels, Steering; Rep. Gr. 40 ; Subframe .

Protected by copyright. Copying for private or commercial purposes, in part or in whole, is not permitted unless authorised by Volkswagen AG. Volkswagen AG does not give any guarantee in respect to the correctness of information in this document. Copyright by Volkswagen AG.

– Remove the heat shield above the right drive axle -arrows-.

– Remove the drive axles from the transmission. Refer to ⇒ Suspension, Wheels, Steering; Rep. Gr. 40 ; Drive Axles, Removing and Installing .

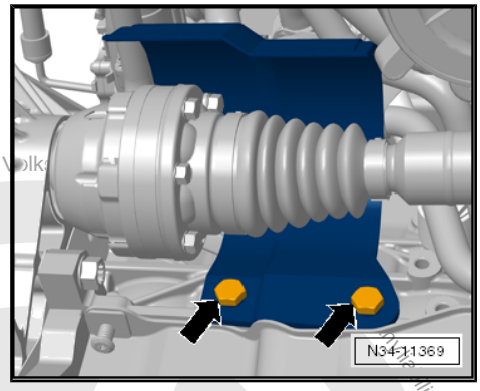

– Tie the right drive axle as high up as possible.

– Move the left drive axle to the rear and secure it. Be careful not to damage the surface protection.

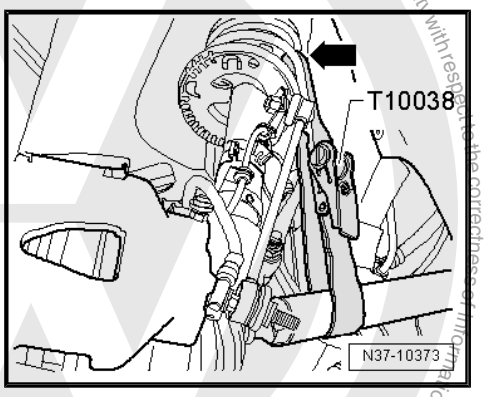

– There may be a small cover plate on the plate between the engine and transmission above the right flange shaft. Remove this cover plate -A-, if equipped.

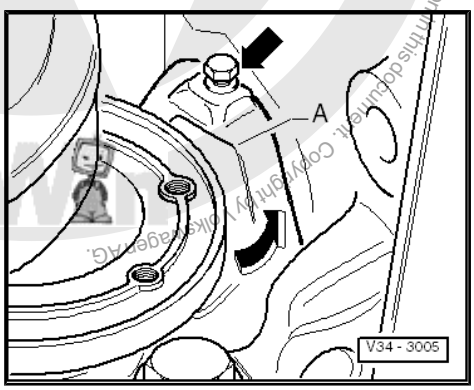

– Remove the bolts -1 and 2- from the transmission bracket -A-.

– Then lower the engine/transmission slightly using the Engine Support Bridge - 10-222A- spindles so that the transmission bracket can be removed.

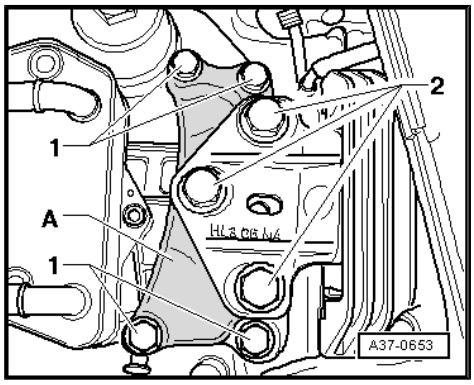

Protected by copyright. Copying for private or commercial purposes, in part or in whole, is not permitted unless authorised by Volkswagen AG. Volkswagen AG does not guarantee or accept any liability with respect to the correctness of information in this document. Copyright by Volkswagen AG.

– Remove the transmission bracket in direction of -arrow-.

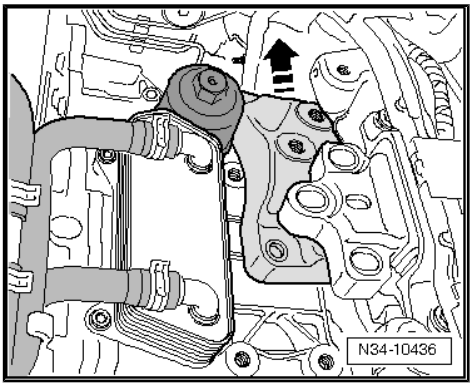

Protected by copyright. Copying for private or commercial purposes, in part or in whole, is not permitted unless authorised by Volkswagen AG. Volkswagen AG does not guarantee or accept any liability with respect to the correctness of information in this document. Copyright by Volkswagen AG.

To remove the transmission 02E, the Transmission Support - 3282- is equipped with the Transmission Support - Mounting Plate - 3282/42A- and positioned on the Engine and Gearbox Jack - VAS6931- .

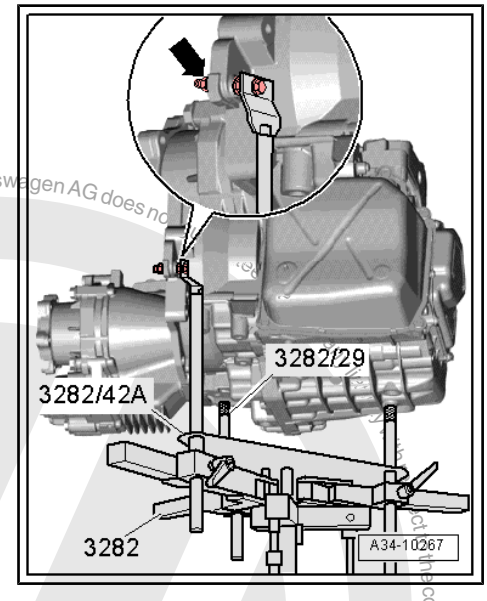

– Align the arms of the Transmission Support - 3282- so that they match up with the holes in the Transmission Support - Mounting Plate 42A - 3282/42A- .

– Install the mounting element as illustrated on the Transmission Support - Mounting Plate 42A - 3282/42A- .

– Place the Engine and Gearbox Jack - VAS6931- under the vehicle.

• The arrow symbol on the Transmission Support - Mounting Plate 42A - 3282/42A- points in the direction of travel.

– Align the Transmission Support - 3282- so that it is parallel to the transmission.

– Install the Transmission Support - Pins 29 - 3282/29- in the transmission.

– Secure both the other support elements to the transmission as shown.

Note

♦ *Deviating from the illustration of the Adjusting Plate the front transmission support is illustrated mounted to the transmission -arrow-.*

♦ *DSG® transmission 02E "AWD" is shown in the illustration. The mounting elements on the "FWD" are identical.*

– Support the transmission by lifting it from underneath using the Engine and Gearbox Jack - VAS6931- .

The transmission is disconnected from the engine in this position.

– Remove the remaining engine/transmission connecting bolts.

– Remove transmission from engine »while being careful of selector lever cable« and lower the transmission.

Note

Pay attention to all of the lines when lowering the transmission.

Transport the transmission and secure to the assembly stand. Refer to
⇒ "8 Transmission, Transporting and Securing to Assembly Stand", page 131 .

Install the transmission. Refer to
⇒ "7.2 Transmission, Installing, Jetta MY 2011 with 2.0L 103 kW Diesel", page 113 .

Protected by copyright. Copying for private or commercial purposes, in part or in whole, is not permitted unless authorised by Volkswagen AG. Volkswagen AG does not guarantee or accept any liability with respect to the correctness of information in this document. Copyright by Volkswagen AG.

7.2 Transmission, Installing, Jetta MY 2011 with 2.0L 103 kW Diesel

Note

Refer to "Transmission, Removing"
⇒ "7.1 Transmission, Removing, Jetta MY 2011 with 2.0L 103 kW Diesel", page 102 *for a list of the special tools needed.*

Install in reverse order of removal. Nevertheless, important steps should be named here:

Note

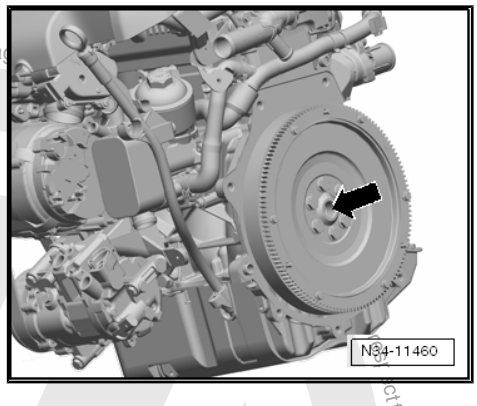

- *Always replace the needle bearing -arrow- after separating the engine and transmission.*
- *If the needle bearing in the crankshaft is damaged, the gears will no longer shift correctly.*

– Replace the needle bearing in the crankshaft. Refer to ⇒ Rep. Gr. 13 ; Crankshaft; Needle Bearing in Crankshaft, Replacing .

– Transmission pins (not splines) on the driveshaft must also be lightly lubricated.

– Make sure both alignment sleeves between the engine and the transmission are correctly seated.

– Make sure the intermediate plate fits correctly.

– Guide the selector lever cable into the cable bracket as soon as possible.

Check the selector lever cable when raising the transmission. Do not fail to place it in the cable mounting bracket »early«.

Do not grease the selector lever cable.

Guide the engine and transmission together by hand until the engine flange and transmission flange come into contact with one another all around.

If they do not, »something is incorrect«!

– Adjust the transmission mount until the engine and transmission »are in alignment«.

– Turn the crankshaft slightly if necessary.

– Insert the transmission without pinching any lines.

– Attach the transmission to the engine. Transmission to engine tightening specifications. Refer to
⇒ "7.5 Tightening Specifications", page 129 .

Protected by copyright. Copying for private or commercial purposes, in part or in whole, is not permitted unless authorised by Volkswagen AG. Volkswagen AG does not guarantee or assume any liability with respect to the correctness of information in this document. Copyright by Volkswagen AG.

Install the left subframe mount as follows:

– Replace all bolts -1 and 2- for the left subframe mount.

– Install all new bolts first by hand.

– Fasten the transmission bracket -A- to the transmission using the bolts -1-.

– The align the engine/transmission in its installation position. Lift until the transmission bracket is touching the transmission mount completely.

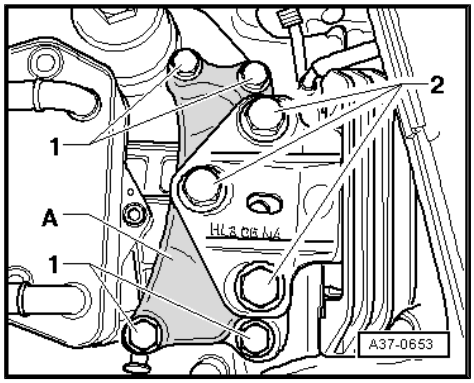

> **Caution**
>
> *There is a risk of damaging the threads in transmission bracket by inserting the bolts at an angle.*
>
> ♦ *Before installing the bolts -2-, the transmission bracket and transmission mount support arm must be absolutely parallel to each other. If necessary, lift the back of the transmission using the Engine and Gearbox Jack .*

Install the engine/transmission mount without tension. Refer to ⇒ Rep. Gr. 10 ; Subframe Mount .

– Tighten the bolts -2- to the tightening specification. Refer to ⇒ “7.5 Tightening Specifications”, page 129 .

> **WARNING**
>
> *Only remove the Engine Support Bridge - 10-222A- when all the left and right subframe mount bolts are tightened to the tightening specification.*

– Remove the Engine Support Bridge -10-222A- .

– Install the starter. Refer to ⇒ Electrical Equipment; Rep. Gr. 27 ; Starter; Starter, Removing and Installing .

Connect the connector -A- from the DSG Transmission Mechatronic - J743- as follows.

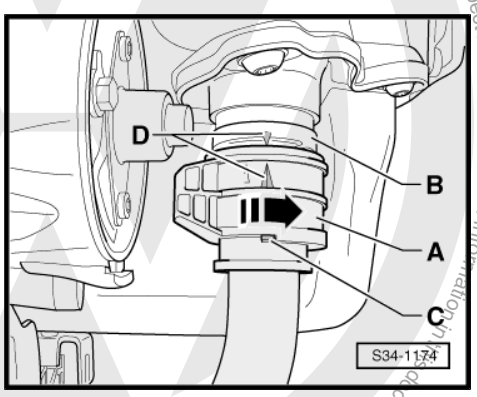

– The arrow -D- on the DSG Transmission Mechatronic - J743- -B- must line up with the connector -A- as well as with the tab -C-.

– Connect the connector -A- carefully all the way and then turn the lock »clockwise« in the direction of -arrow-.

– Attach the drive axles to the transmission. Refer to ⇒ Suspension, Wheels, Steering; Rep. Gr. 40 ; Drive Axles, Removing and Installing .

– Install the heat shield over the right drive axle. Refer to ⇒ Suspension, Wheels, Steering; Rep. Gr. 40 ; Drive Axles, Overview and Servicing; Drive Axle Heat Shield .

– Install the subframe and steering gear. Refer to ⇒ Suspension, Wheels, Steering; Rep. Gr. 40 ; Subframe .

Protected by copyright. Copyright by Volkswagen AG. Volkswagen AG does not guarantee or accept any liability with respect to the correctness of information in this document. Copyright by Volkswagen AG.

– Attach the pendulum support to the transmission using new bolts. Refer to ⇒ Rep. Gr. 10 .

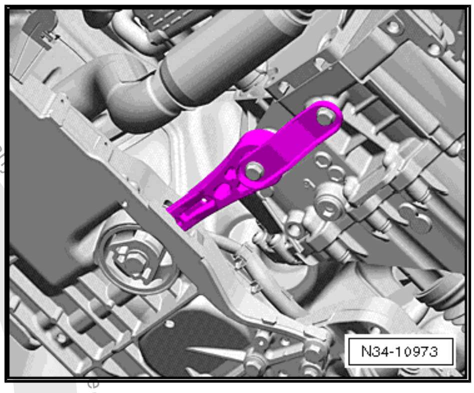

– Selector lever cable lock washers -arrows- must be replaced.

– Always adjust the selector lever cable. Refer to ⇒ “5.6 Selector Lever Cable, Adjusting”, page 80 .

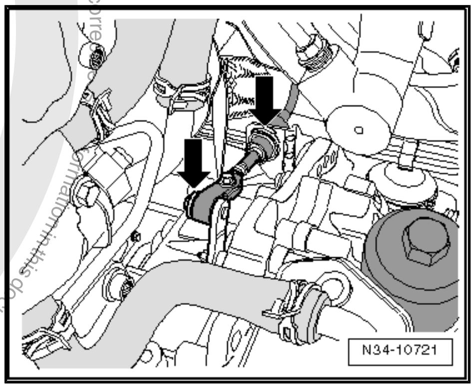

– Check the coolant level and fill if necessary. Refer to ⇒ Rep. Gr. 19 .

– Assemble the exhaust system and then attach the exhaust system bracket to the subframe. Refer to ⇒ Rep. Gr. 26 .

– Install the plenum chamber cover. Refer to ⇒ Body Exterior; Rep. Gr. 50 ; Plenum Chamber Cover; Plenum Chamber Cover, Removing and Installing .

– Install the bolts -arrows- for the left and right lock carrier retaining brackets to the tightening specification. Refer to ⇒ Body Exterior; Rep. Gr. 50 ; Lock Carrier; Lock Carrier - Attachments .

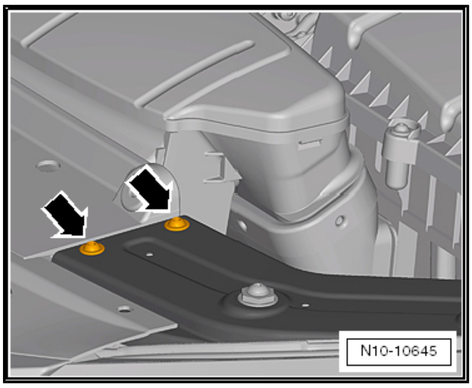

– Install the battery tray and the battery. Refer to ⇒ Electrical Equipment; Rep. Gr. 27 ; Battery; Battery, Removing and Installing .

– Install the air filter. Refer to ⇒ Rep. Gr. 23 ; Diesel Direct Injection System; Overview - Air Filter .

– Connect the battery and follow the steps after connecting the battery. Refer to ⇒ Electrical Equipment; Rep. Gr. 27 ; Battery; Battery, Disconnecting and Connecting .

– Install the engine cover. Refer to ⇒ Rep. Gr. 15 ; Cylinder Head; Engine Cover, Removing and Installing .

– Install the left front housing liner. Refer to ⇒ Body Exterior; Rep. Gr. 66 ; Wheel Housing Liner; Front Wheel Housing Liner, Removing and Installing .

– Install the noise insulation. Refer to ⇒ Body Exterior; Rep. Gr. 50 ; Noise Insulation .

– Install the front wheels. Refer to ⇒ Suspension, Wheels, Steering; Rep. Gr. 44 ; Wheel Installation Tightening Specifications .

7.3 Transmission, Removing, Jetta MY 11, 2.0L 147 kW Gasoline Engine

Brief Description

The transmission is removed downward separately.

»From above«:

The battery, air filter and starter are removed. The steering gear wiring harness is disconnected and »freed up«. This way it can be lowered together with the subframe and the steering gear. En-

Protected by copyright. Copying for private or commercial purposes, in part or in whole, is not permitted unless authorised by Volkswagen AG. Volkswagen AG does not guarantee or accept any liability with respect to the correctness of information in this document. Copyright by Volkswagen AG.

gine and transmission are supported before the left subframe mount is removed.

»From underneath«:

The -subframe-, with the -pendulum support-, with the -steering gear- and with -both control arms- are removed together.

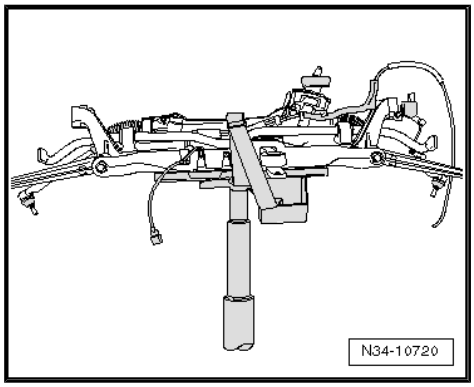

Removing the -subframe-. Refer to ⇒ Rep. Gr. 40 . If done correctly, the subframe can be removed and installed without the customer experiencing increased tire wear later. It is recommended to read this information »prior« to removing the transmission. In this way, -subframe- can be secured and removed correctly.

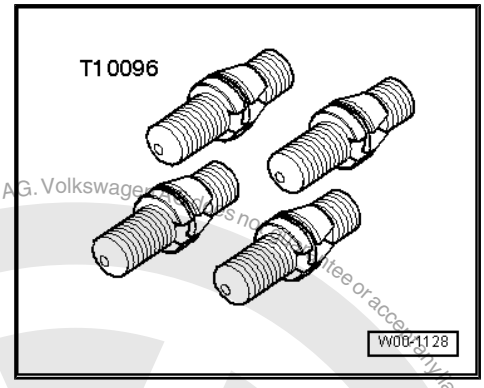

Locating Pins - T10096- and Subframe Locking Pin (2 pc.) - T10452- will be needed.

If the -subframe- is not secured by the pins, then later an axle alignment will be necessary.

In this case, an axle alignment is unnecessary and expensive additional work! It would be a lot of work and an unnecessary charge for the customer!

Installing the Locating Pins - T10096- and Subframe Locking Pin (2 pc.) - T10452- is simple. It is very useful though.

Special tools and workshop equipment required

- Transmission Support - 3282-
- Transmission Support - Mounting Plate 42A - 3282/42A-
- Transmission Support - Pins 29 - 3282/29-
- Torque Wrench 1331 5-50Nm - VAG1331-
- Torque Wrench 1332 40-200Nm - VAG1332-
- Engine and Gearbox Jack - VAS6931-
- Engine Support Bridge - 10-222A-
- Hose Clamps - Up To 25mm - 3094- or Hose Clamps - Up To 40mm - 3093-
- Tensioning Strap - T10038-
- Engine Support - Basic Set - T40091-
- Engine Support - Supplement Kit - T40093A-
- Engine Bung Set - VAS6122-

Protected by copyright. Copying for private or commercial purposes, in part or in whole, is not permitted unless authorised by Volkswagen AG. Volkswagen AG does not guarantee or accept any liability with respect to the correctness of information in this document. Copyright by Volkswagen AG.

Protected by copyright. Copying for private or commercial purposes, in part or whole, is not permitted unless authorised by Volkswagen AG. Volkswagen AG does not guarantee the correctness of information in this document.

Removing

– Move the selector lever into »P«.

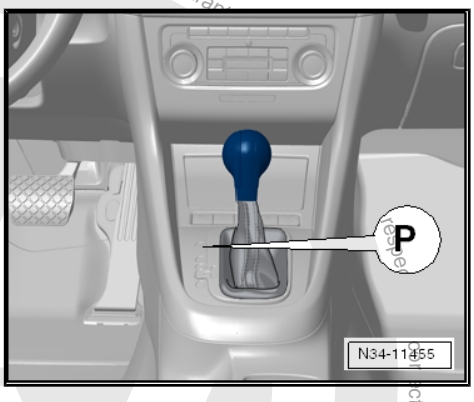

Note

To perform work sequence, the ground cable must be disconnected from battery. Check if a coded radio is installed. If necessary, obtain the anti-theft coding beforehand.

– Disconnect the battery ground cable. Refer to ⇒ Electrical Equipment; Rep. Gr. 27 ; Battery; Battery, Disconnecting and Connecting .

– Remove the engine cover. Refer to ⇒ Rep. Gr. 15 ; Cylinder Head; Engine Cover, Removing and Installing .

– Remove the complete air filter housing. Refer to ⇒ Rep. Gr. 24 ; Air Filter; Air Filter Housing, Removing and Installing .

– Remove the battery and the battery tray. Refer to ⇒ Electrical Equipment; Rep. Gr. 27 ; Battery; Battery, Removing and Installing .

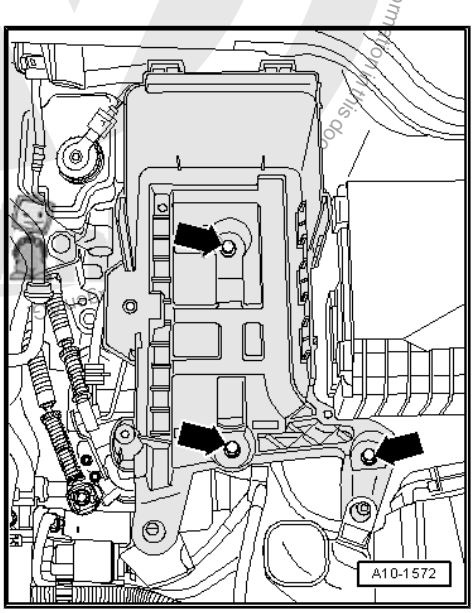

– Remove the selector lever cable from the transmission -arrows-.

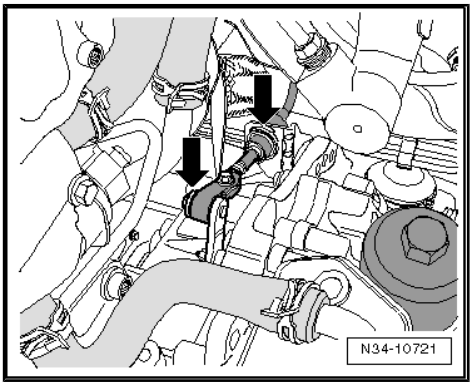

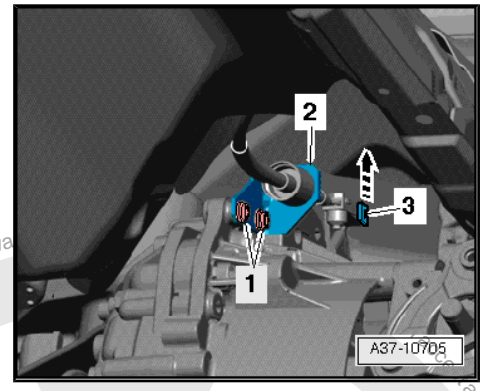

Note

- *Use pliers to remove the lock washer from the cable bracket. Do not use a sharp-edged lever. Otherwise the selector lever cable could get damaged.*
- *Remove the cable bracket -2- from the transmission, if necessary. Remove the bolts -1- and the lock washer -3-.*
- *Replace the bolts -1- and the lock washers.*
- *Bolt tightening specification -1- 20 Nm +90°.*

Caution

Risk of damaging the selector lever cable.

- ***Remove the selector level cable from the cable bracket when lowering transmission.***
- ***Do not bend or kink the selector lever cable.***

– Place a lint-free cloth on to transmission fluid cooler and transmission to absorb escaping coolant.

Note

- *The cooling system is under pressure when the engine is warm.*
- *Cover the coolant reservoir cap with a cloth and open it carefully before removing the coolant hoses.*

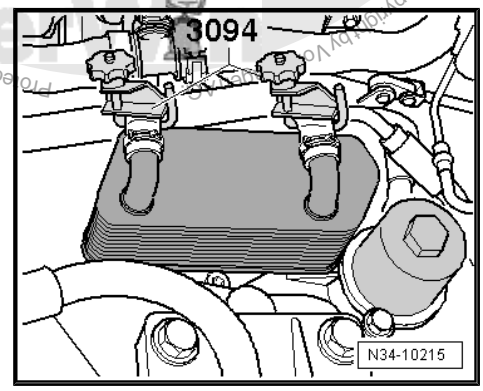

– Clamp the coolant hoses with Hose Clamps - Up To 25mm - 3094- or Hose Clamps - Up To 40mm - 3093- and remove the hoses from the transmission fluid cooler.

– Seal off the transmission fluid cooler connections with sealing plugs taken from for example the Engine Bung Set - VAS6122- .

Protected by copyright. Copying for private or commercial purposes, in part or in whole, is not permitted unless authorised by Volkswagen. Copyright by Volkswagen. No liability with respect to the correctness of information in this document. Copyright by Volkswagen.

– Remove the starter -A-. Refer to ⇒ Electrical Equipment; Rep. Gr. 27 ; Starter; Starter, Removing and Installing .

Remove the »lower« bolt first.

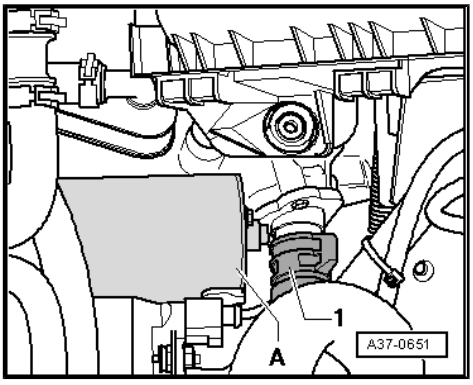

Caution

There is a risk of damaging the DSG Transmission Mechatronic - J743- with static electricity.

- *Do not touch contacts in DSG Transmission Mechatronic - J743- connector with hands.*

– To discharge any static electricity, touch the vehicle ground with hand (without wearing a glove). Refer to ⇒ “1.7 Electrical Components”, page 5 .

– Turn the Mechatronic connector lock -1- »counter-clockwise« to release and disconnect the connector.

– Remove the wires and bracket from the front of the transmission cover -arrows- (two M6 nuts).

– Route the wires near the transmission cover upward and tie them up.

– Remove all the upper bolts between the engine and the transmission.

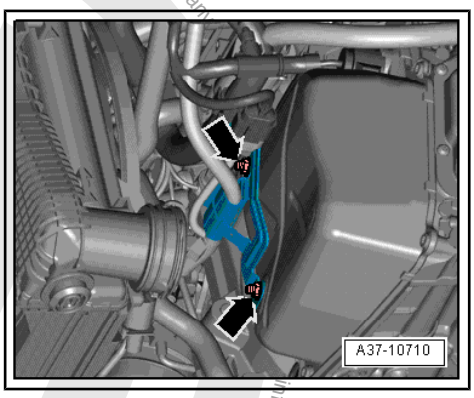

These tools are suitable for this.

Protected by copyright. Copying for private or commercial purposes, in part or in whole, is not permitted unless authorised by Volkswagen AG. Volkswagen AG does not guarantee or accept any liability with respect to the correctness of information in this document. Copyright by Volkswagen AG.

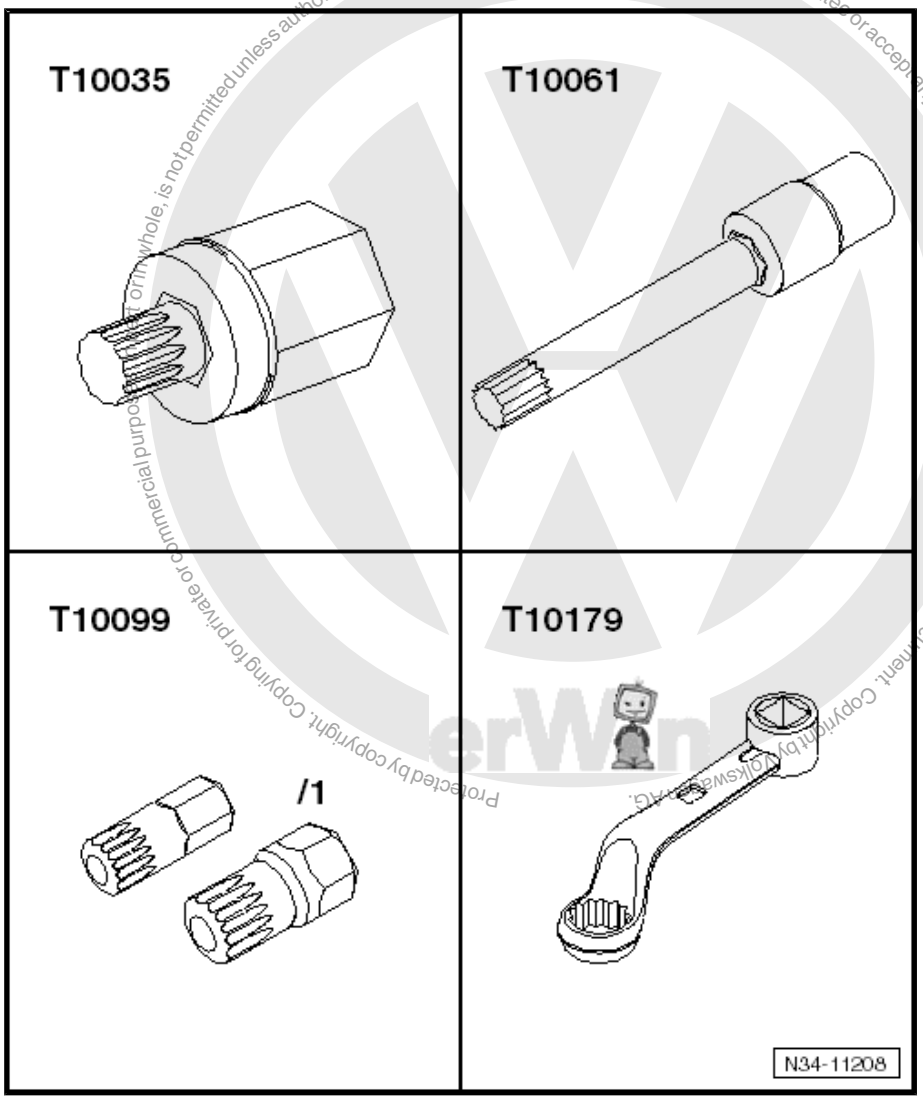

One bolt is located inside the hole for the starter -arrow-. Use Socket - Xzn 14 - T10061- to remove the bolt.

– Remove the plenum chamber cover. Refer to ⇒ Body Exterior; Rep. Gr. 50 ; Plenum Chamber Cover; Plenum Chamber Cover, Removing and Installing .

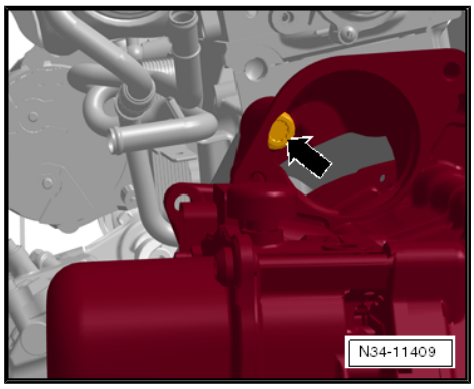

Volkswagen AG. Volkswagen AG does not guarantee or accept any liability with respect to the correctness of information in this document. Copyright by Volkswagen AG. Protected by copyright. Copying for private or commercial purposes, in whole, is not permitted unless authorised

– Remove the bolts -arrows- for the left and right lock carrier retaining brackets.

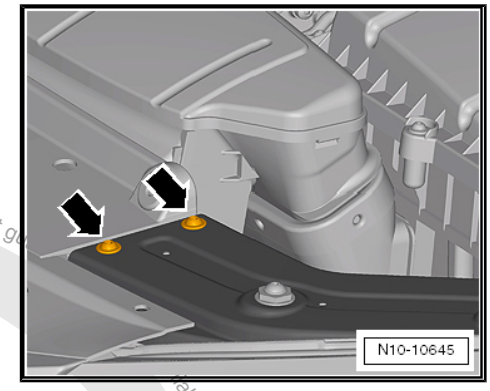

– Remove the lower mounts on the Engine Support Bridge - Engine Support 28 - 10-222A/28- and replace them with the Engine Support Bridge - Engine Support 28-2 - 10-222A/28-2- .

– Remove the bolts -arrows- for securing the engine support bridge on the lock carrier from the Engine Support Bridge - Engine Support 28-2 - 10-222A/28-2- .

• Use the bolts present in the Engine Support Bridge - Engine Support 28-2 - 10-222A/28-2- for attaching the Engine Support Bridge - Engine Support 28 - 10-222A/28- . Not the bolts for the retaining bracket.

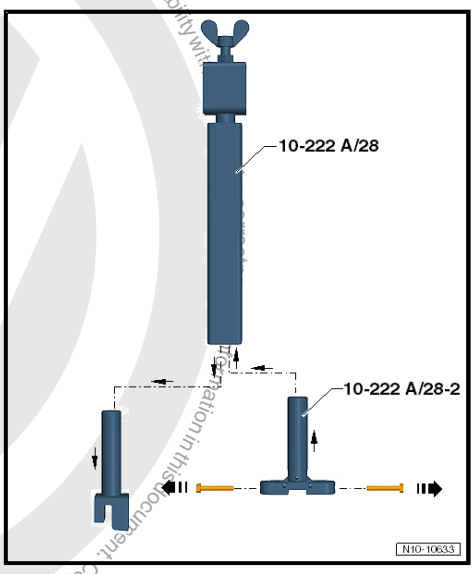

– Install the Engine Support Bridge - Engine Support 28 - 10-222A/28- and tighten the bolts to 8 Nm -arrows-.

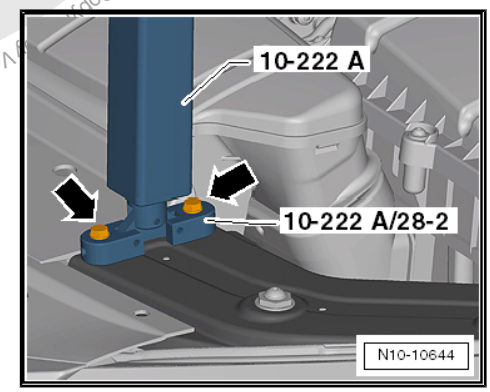

Caution

A second technician is needed to mount the Engine Support Bridge - 10-222A- on the vehicle to prevent the Engine Support Bridge - 10-222A- from tipping.

– If there are hose and cable connections located near the engine lifting eyes for the Engine Support Bridge - 10-222A- , these must now be removed.

Install the Engine Support Bridge - 10-222A- as shown.

– First slide the Moveable Joints -2- onto the Square Pipe from the Engine Support Bridge - 10-222A- .

– Mount the Engine Support Bridge - 10-222A- on the suspension strut towers and have a second technician hold it to prevent it from tipping.

– Push the Engine Support - Basic Set - Square Pipe - T40091/1- - 5- from the front left and right through the Engine Support Bridge - Engine Support 28 - 10-222A/28- - 6- and place on each side of the Engine Support - Supplement Kit - Movable Joint - T40093/4- - 4-.

– Push the Engine Support - Basic Set - Rail with Holes - T40091/2- - 7- with the Engine Support - Supplement Kit -

Protected by copyright. Copying for private or commercial purposes, in part or in whole, is not permitted unless authorised by Volkswagen AG. Volkswagen AG does not guarantee or accept any liability with respect to the correctness of information in this document. Copyright by Volkswagen AG.

Mount - T40093/5- - 8- in the Engine Support - Supplement Kit - Movable Joint - T40093/4- - 4-.

– Install the locking pins into the Engine Support - Basic Set - Rail with Holes - T40091/2- -7- and secure it with the cotter pins.

orised by Volkswagen AG. Volkswagen AG does not guarantee or accept any liability with respect to the correctness of information in this docum

1 - Engine Support Bridge - Engine Support 31 - Adapter 2 - 10-222A/31-2-

2 - Engine Support - Basic Set - Moveable Joint - T40091/3-

3 - Engine Support Bridge - Engine Support 31 - Adapter 1 - 10-222A/31-1-

4 - Engine Support - Supplement Kit - Movable Joint - T40093/4-

5 - Engine Support - Basic Set - Square Pipe - T40091/1-

6 - Engine Support Bridge - Engine Support 28 - 10-222A/28- with Engine Support Bridge - Engine Support 28-2 - 10-222A/28-2-

7 - Engine Support - Basic Set - Rail with Holes - T40091/2-

8 - Engine Support - Supplement Kit - Mount 5 - T40093/5-

9 - Engine Support Bridge - Spindle - 10-222A/11-

❑ Engaged in the engine lifting eye -arrow-.

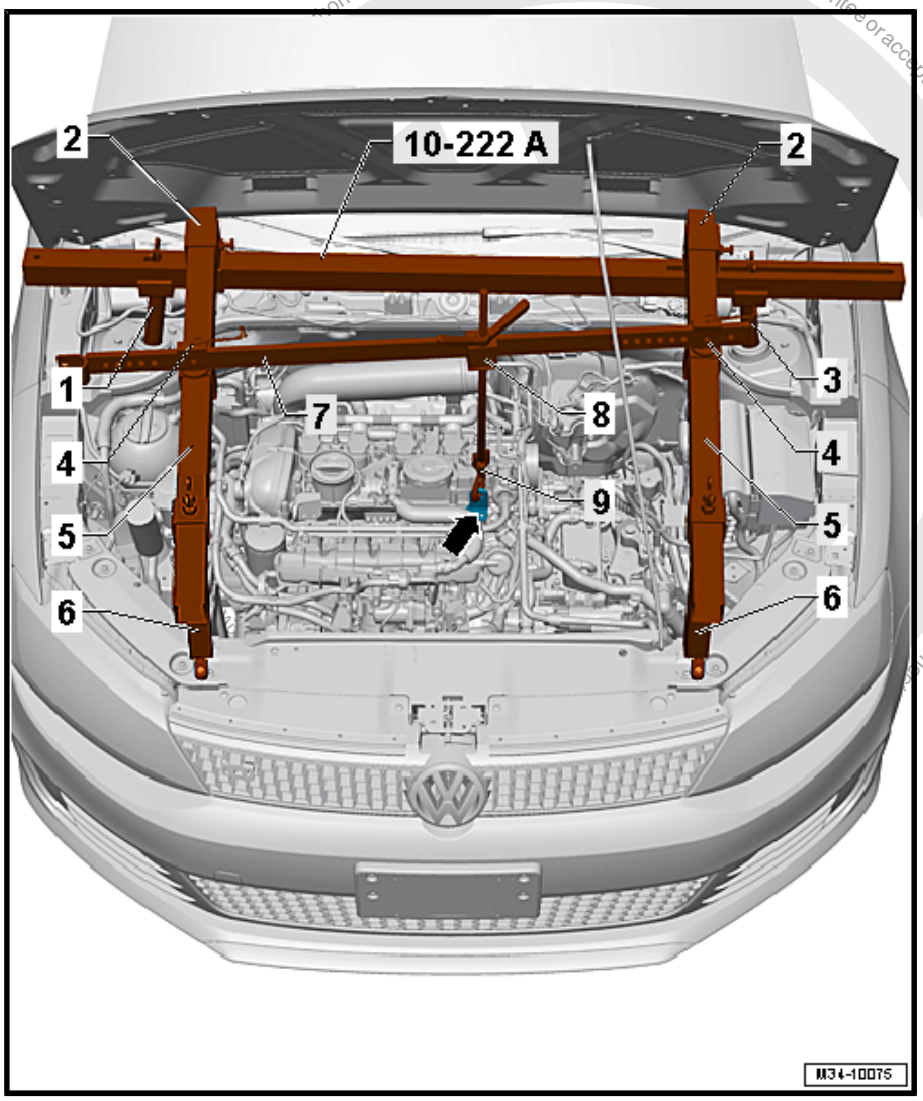

– Tighten all the threaded connections on the Engine Support Bridge hand-tight. While doing so, adjust the height of the Engine Support Bridge parallel over the Engine Support Bridge - Engine Support 28 - 10-222A/28- .

– Lightly preload the engine/transmission assembly using the spindle, but do not lift it.

– Loosen left and right front wheel bolts.

– Lift the vehicle, all four mounts from lifting platform at the same height.

– Remove the front wheels.

– Remove the noise insulation. Refer to ⇒ Body Exterior; Rep. Gr. 50 ; Noise Insulation .

– Remove the left front housing liner. Refer to ⇒ Body Exterior; Rep. Gr. 66 ; Wheel Housing Liner; Overview - Front Wheel Housing Liner .

Protected by copyright. Copying for private or commercial purposes, in part or in whole, is not permitted unless authorised by Volkswagen AG. Volkswagen AG does not guarantee or accept any liability with respect to the correctness of information in this document. Copyright by Volkswagen AG.

Caution

Risk of damaging the decoupling element.

- *Do not bend the decoupling element more than 10°.*
- *Do not load the decoupling element.*
- *Do not damage the wire mesh on the decoupling element.*

– Separate the exhaust system at the clamping sleeve and remove the bracket from the subframe -arrows-. Refer to ⇒ Rep. Gr. 26 .

– Tie up the front exhaust pipe.

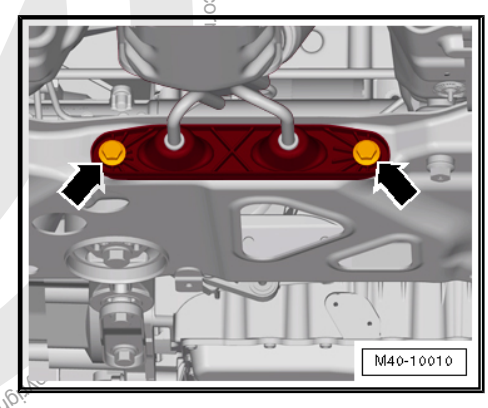

– Remove the bolts -11- and then remove the pendulum support from the transmission.

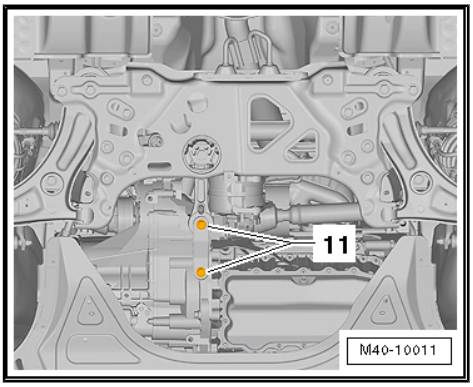

– Secure the subframe before removing. Refer to ⇒ Suspension, Wheels, Steering; Rep. Gr. 40 ; Subframe; Subframe, Securing .

Note

If the -subframe- is not secured, a vehicle alignment must be performed later.

– Remove the subframe and steering gear. Refer to ⇒ Suspension, Wheels, Steering; Rep. Gr. 40 ; Subframe .

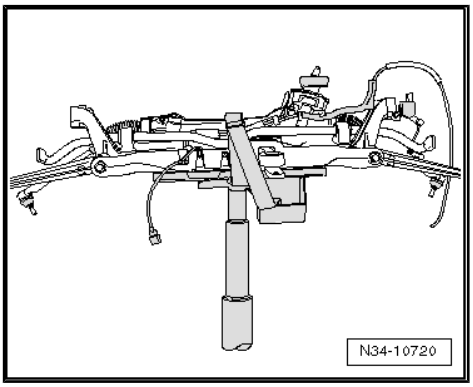

– Remove the heat shield above the right drive axle -arrows-.

– Remove the drive axles from the transmission. Refer to ⇒ Suspension, Wheels, Steering; Rep. Gr. 40 ; Drive Axles, Removing and Installing .

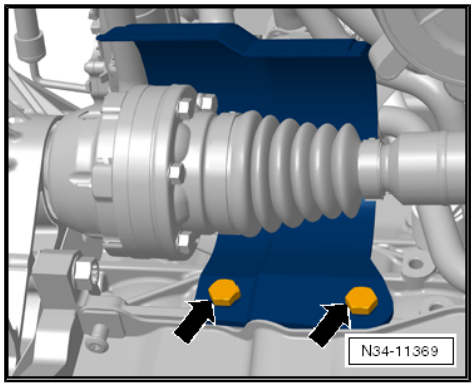

– Tie the right drive axle as high up as possible.

– Move the left drive axle to the rear and secure it. Be careful not to damage the surface protection.

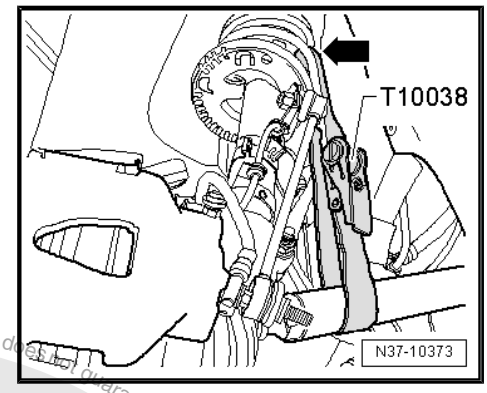

– There may be a small cover plate on the plate between the engine and transmission above the right flange shaft. Remove this cover plate -A-, if equipped.

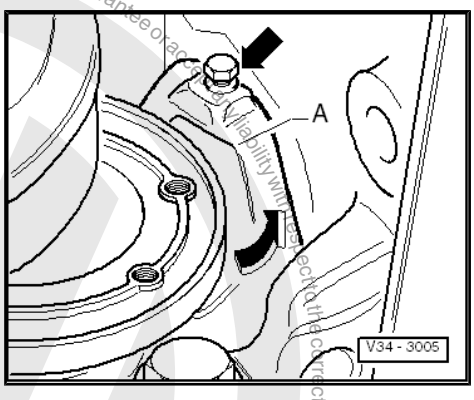

– Remove the bolts -1 and 2- from the transmission bracket -A-.

– Then lower the engine/transmission slightly using the Engine Support Bridge - 10-222A- spindle so that the transmission bracket can be removed.

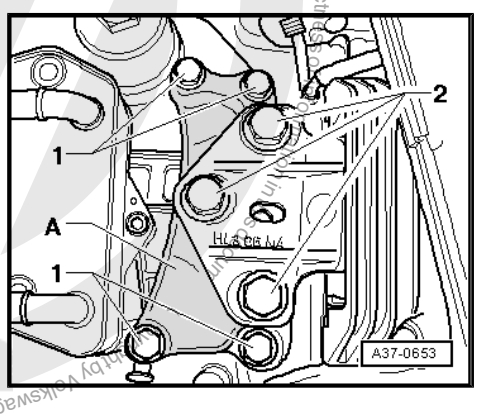

Protected by copyright. Copying for private or commercial purposes, in part or in whole, is not permitted unless authorised by Volkswagen AG. Volkswagen AG does not guarantee or accept any liability with respect to the correctness of information in this document. Copyright by Volkswagen AG.

– Remove the transmission bracket in direction of -arrow-.

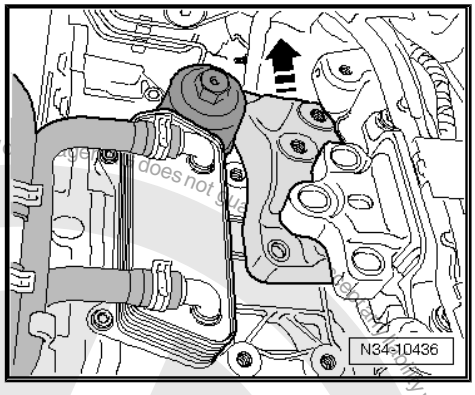

Protected by copyright. Copying for private or commercial purposes, in part or in whole, is not permitted unless authorised by Volkswagen AG. Copyright by Volkswagen AG.

To remove the transmission 02E, the Transmission Support - 3282- is equipped with the Transmission Support - Mounting Plate - 3282/42A- and positioned on the Engine and Gearbox Jack - VAS6931- .

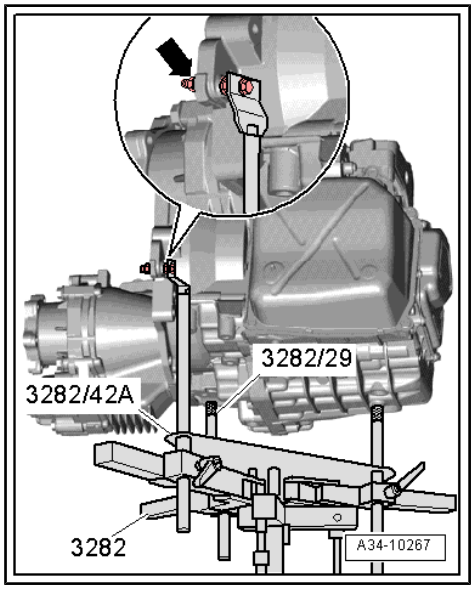

– Align the arms of the Transmission Support so that they match up with the holes in the Transmission Support - Mounting Plate 42A - 3282/42A- .

– Install the mounting element as illustrated on the Transmission Support - Mounting Plate 42A - 3282/42A- .

– Place the Engine and Gearbox Jack - VAS6931- under the vehicle.

• The arrow symbol on the Transmission Support - Mounting Plate 42A - 3282/42A- points in the direction of travel.

– Align the Transmission Support - 3282- so that it is parallel to the transmission.

– Install the Transmission Support - Pins 29 - 3282/29- in the transmission.

– Secure both the other support elements to the transmission as shown.

Note

♦ *Deviating from the illustration of the Adjusting Plate the front transmission support is illustrated mounted to the transmission -arrow-.*

♦ *DSG® transmission 02E "AWD" is shown in the illustration. The mounting elements on the "FWD" are identical.*

– Support the transmission by lifting it from underneath using the Engine and Gearbox Jack - VAS6931- .

The transmission is disconnected from the engine in this position.

– Remove the remaining engine/transmission connecting bolts.

– Remove transmission from engine »while being careful of selector lever cable« and lower the transmission.

Note

Pay attention to all of the lines when lowering the transmission.

Transport the transmission and secure to the assembly stand. Refer to
⇒ "8 Transmission, Transporting and Securing to Assembly Stand", page 131 .

Install the transmission. Refer to
⇒ "7.4 Transmission, Installing, Jetta MY 11, 2.0L 147 kW Gasoline Engine", page 127 .

Protected by copyright. Copying for private or commercial purposes, in part or in whole, is not permitted unless authorised by Volkswagen AG. Volkswagen AG does not guarantee or accept any liability with respect to the correctness of information in this document. Copyright by Volkswagen AG.

7.4 Transmission, Installing, Jetta MY 11, 2.0L 147 kW Gasoline Engine

Note

- *Refer to "Transmission, Removing" ⇒ "7.3 Transmission, Removing, Jetta MY 11, 2.0L 147 kW Gasoline Engine", page 115 for a list of the special tools needed.*
- *Install the engine/transmission mount without tension. Refer to ⇒ Rep. Gr. 10 .*

Install in reverse order of removal. Nevertheless, important steps should be named here:

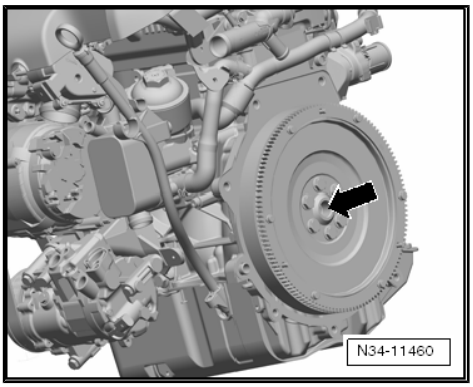

Note

- *Always replace the needle bearing -arrow- after separating the engine and transmission.*
- *If the needle bearing in the crankshaft is damaged, the gears will no longer shift correctly.*

– Replace the needle bearing in the crankshaft. Refer to ⇒ Rep. Gr. 13 ; Crankshaft; Needle Bearing in Crankshaft, Replacing .

– Transmission pins (not splines) on the driveshaft must also be lightly lubricated.

– Make sure both alignment sleeves between the engine and the transmission are correctly seated.

– Make sure the intermediate plate fits correctly.

– Guide the selector lever cable into the cable bracket as soon as possible.

Check the selector lever cable when raising the transmission. Do not fail to place it in the cable mounting bracket »early«.

Do not grease the selector lever cable.

Guide the engine and transmission together by hand until the engine flange and transmission flange come into contact with one another all around.

If they do not, »something is incorrect«!

– Adjust the transmission mount until the engine and transmission »are in alignment«.

– Turn the crankshaft slightly if necessary.

– Insert the transmission without pinching any lines.

– Attach the transmission to the engine. Transmission to engine tightening specifications. Refer to ⇒ "7.5 Tightening Specifications", page 129 .

Protected by copyright. Copyright by Volkswagen AG. Volkswagen AG does not guarantee or accept any liability with respect to the correctness of information in this document. Copyright by Volkswagen AG. Protected by copyright. Copyright for private or commercial purposes, in part or in whole, is not permitted unless authorized by Volkswagen AG.

Install the left subframe mount as follows:

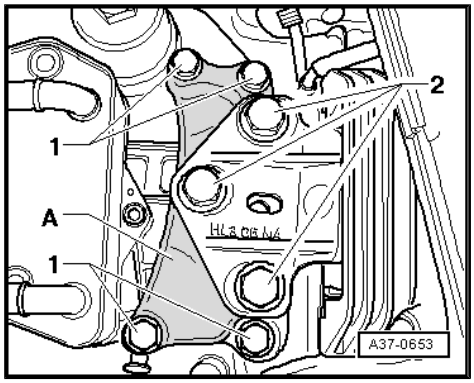

- Replace all bolts -1 and 2- for the left subframe mount.
- Install all new bolts first by hand.
- Fasten the transmission bracket -A- to the transmission using the bolts -1-.
- The align the engine/transmission in its installation position. Lift until the transmission bracket is touching the transmission mount completely.

> ⚠ **Caution**
>
> *There is a risk of damaging the threads in transmission bracket by inserting the bolts at an angle.*
>
> ♦ *Before installing the bolts -2-, the transmission bracket and transmission mount support arm must be absolutely parallel to each other. If necessary, lift the back of the transmission using the Engine and Gearbox Jack .*

Install the engine/transmission mount without tension. Refer to ⇒ Rep. Gr. 10 ; Subframe Mount .

- Tighten the bolts -2- to the tightening specification. Refer to ⇒ “7.5 Tightening Specifications”, page 129.

> ⚠ **WARNING**
>
> *Only remove the Engine Support Bridge - 10-222A- when all the left and right subframe mount bolts are tightened to the tightening specification.*

- Remove the Engine Support Bridge - 10-222A- .
- Install the starter. Refer to ⇒ Electrical Equipment; Rep. Gr. 27 ; Starter; Starter, Removing and Installing .

Connect the connector -A- from the DSG Transmission Mechatronic - J743- as follows.

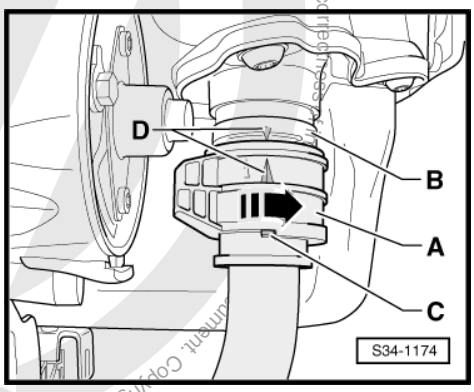

- The arrow -D- on the DSG Transmission Mechatronic - J743- -B- must line up with the connector -A- as well as with the tab -C-.
- Connect the connector -A- carefully all the way and then turn the lock »clockwise« in the direction of -arrow-.
- Attach the drive axles to the transmission. Refer to ⇒ Suspension, Wheels, Steering; Rep. Gr. 40 ; Drive Axles, Removing and Installing .
- Install the heat shield over the right drive axle. Refer to ⇒ Suspension, Wheels, Steering; Rep. Gr. 40 ; Drive Axles, Overview and Servicing; Drive Axle Heat Shield .
- Install the subframe and steering gear. Refer to ⇒ Suspension, Wheels, Steering; Rep. Gr. 40 ; Subframe .

Copyright by Volkswagen AG. Volkswagen AG does not guarantee or accept any liability with respect to the correctness of information. Copying for private or commercial purposes, in part or in whole, is not permitted unless authorised by Volkswagen AG.

– Attach the pendulum support to the transmission using new bolts. Refer to ⇒ Rep. Gr. 10 .

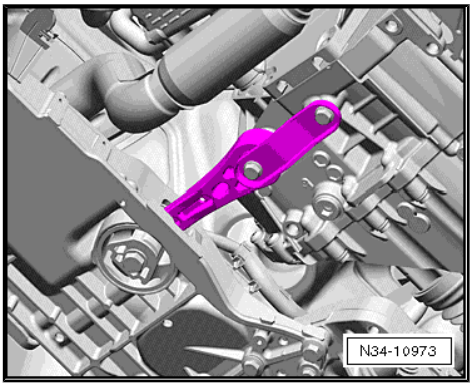

– Selector lever cable lock washers -arrows- must be replaced.
– Always adjust the selector lever cable. Refer to ⇒ "5.6 Selector Lever Cable, Adjusting", page 80 .
– Check the coolant level and fill if necessary. Refer to ⇒ Rep. Gr. 19 .
– Assemble the exhaust system and attach the exhaust system bracket to the subframe. Refer to ⇒ Rep. Gr. 26 .
– Install the plenum chamber cover. Refer to ⇒ Body Exterior; Rep. Gr. 50 ; Plenum Chamber Cover; Plenum Chamber Cover, Removing and Installing .

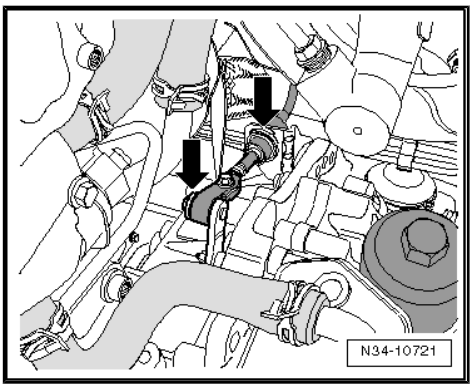

– Install the bolts -arrows- for the left and right lock carrier retaining brackets to the tightening specification. Refer to ⇒ Body Exterior; Rep. Gr. 50 ; Lock Carrier; Lock Carrier - Attachments .
– Install the battery tray and the battery. Refer to ⇒ Electrical Equipment; Rep. Gr. 27 ; Battery; Battery, Removing and Installing .
– Install the air filter. Refer to ⇒ Rep. Gr. 24 ; Air Filter; Air Filter Housing, Removing and Installing .
– Connect the battery and follow the steps after connecting the battery. Refer to ⇒ Electrical Equipment; Rep. Gr. 27 ; Battery; Battery, Disconnecting and Connecting .
– Install the engine cover. Refer to ⇒ Rep. Gr. 15 ; Cylinder Head; Engine Cover, Removing and Installing .
– Install the left front housing liner. Refer to ⇒ Body Exterior; Rep. Gr. 66 ; Wheel Housing Liner; Front Wheel Housing Liner, Removing and Installing .
– Install the noise insulation. Refer to ⇒ Body Exterior; Rep. Gr. 50 ; Noise Insulation .
– Install the front wheels. Refer to ⇒ Suspension, Wheels, Steering; Rep. Gr. 44 ; Wheel Installation Tightening Specifications .

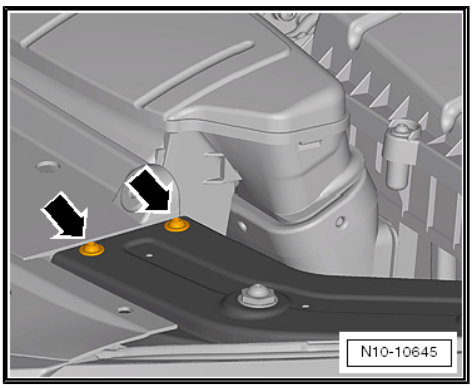

7.5 Tightening Specifications

Engine: 2.0L TDI; 2.0L TFSI

Note

The -arrows- point to the alignment sleeves.

Protected by copyright. Copying for private or commercial purposes, in part or in whole, is not permitted unless authorised by Volkswagen AG. Volkswagen AG does not guarantee or accept any liability with respect to the correctness of information in this document. Copyright by Volkswagen AG.

M12 - 80 Nm

- ❑ When using the Insert Tool - 18 mm - T10179- : 65 Nm.

M10 - 40 Nm

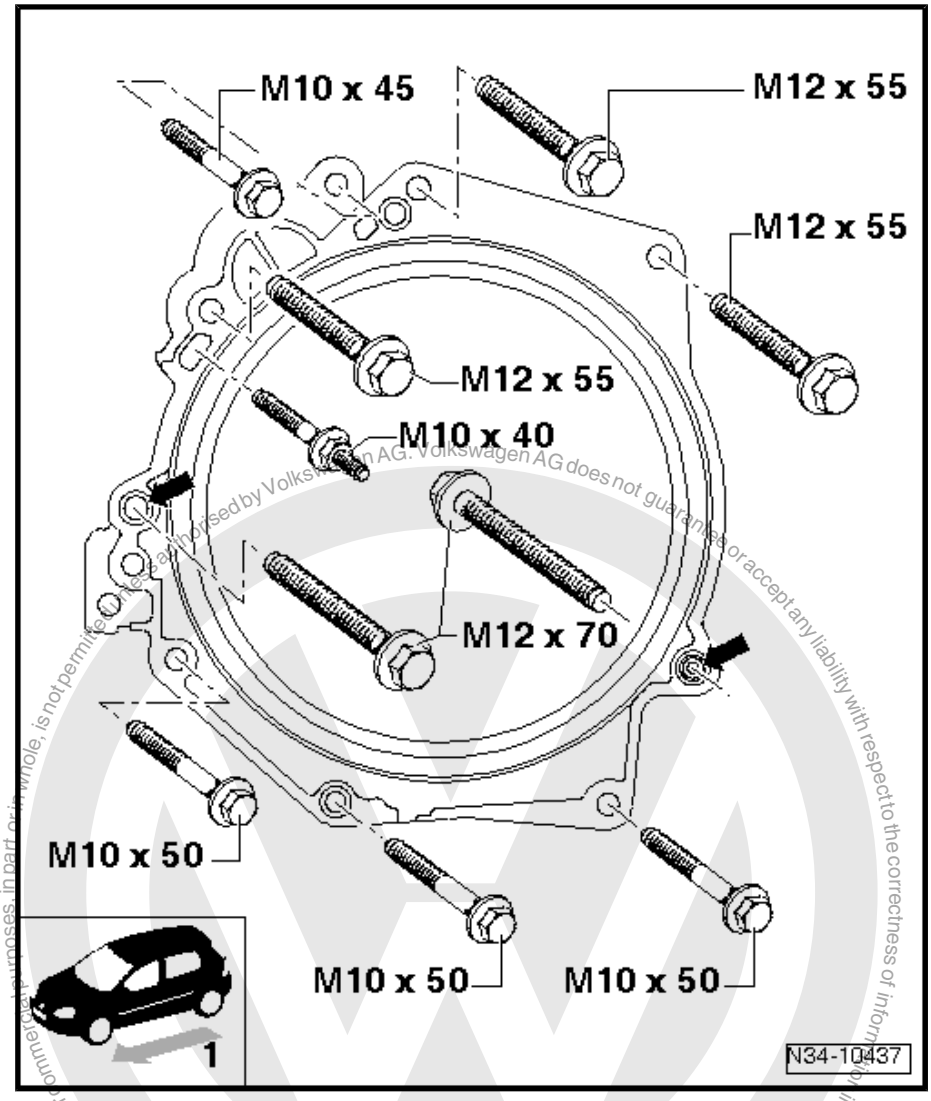

– Replace all bolts -1 and 2- for the left subframe mount.
– Install all new bolts first by hand.
– Tighten the transmission bracket -A- to the transmission to 40 Nm + 90° using the bolts -1-.
– Tighten the bolts -2- to 60 Nm + 90°.

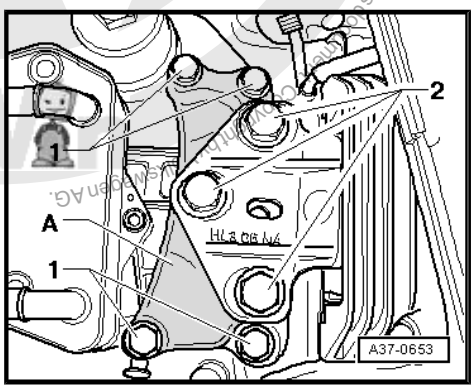

Note

Pry the transmission bracket into the correct seat using a screw-driver while tightening the bolts -2-.

Protected by copyright. Copying for private or commercial purposes, in part or in whole, is not permitted unless authorised by Volkswagen AG. Volkswagen AG does not guarantee or accept any liability with respect to the correctness of information in this document.

8 Transmission, Transporting and Securing to Assembly Stand

Always secure heavy parts when transporting.

Remember there is fluid in the transmission. Do not turn the transmission with the vents facing downward when transporting or when it is on the assembly stand. The fluid will leak out.

Note

Remove the bleeder caps if necessary and use oil-tight plugs.

Transmission, Transporting

– Use appropriate lifting tools, for example part of Engine Sling - 2024A- and the Engine/Gearbox Support Shackle - 10-222A/ 12- (not illustrated).

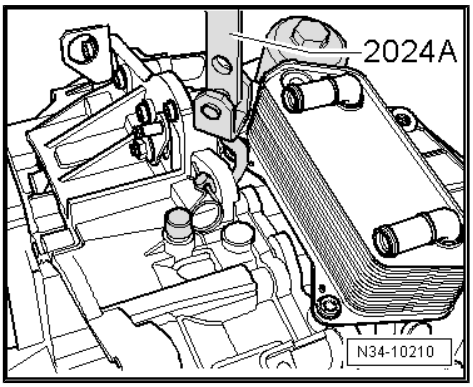

The transmission can also be lifted using the Transmission Support Jig - 3336- .

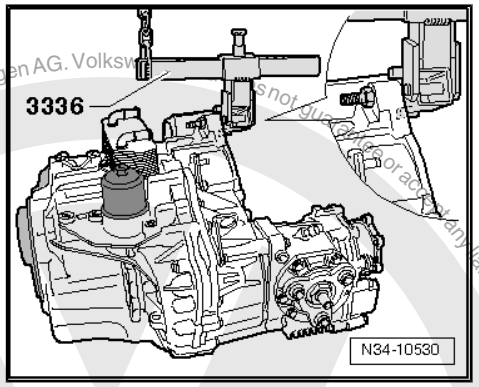

Example: Secure the Transmission on the Assembly Stand.

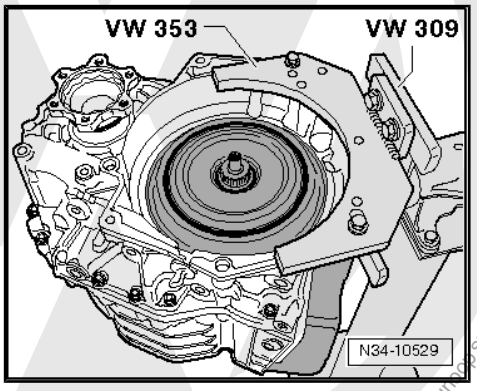

Protected by copyright. Copying for private or commercial purposes, in part or on whole, is not permitted unless authorised by Volkswagen AG. Volkswagen AG does not guarantee or accept any liability with respect to the correctness of information in this document. Copyright by Volkswagen AG.

9 Transmission Fluid and Transmission Fluid Filter

⇒ “9.1 Transmission Fluid Filter, Replacing”, page 132

⇒ “9.2 Fluid Level, Checking and Filling”, page 133

⇒ “9.3 Fluid, Draining and Filling”, page 136

Pay attention to the general repair information. Refer to
⇒ “1 General Repair Information”, page 1 .

9.1 Transmission Fluid Filter, Replacing

Note

- *The transmission fluid filter usually does not need to be replaced.*
- *Change the transmission fluid filter “yes or no”. Refer to ⇒ “1.5.2 Transmission Fluid Filter, When To Change ”, page 4 .*

Removing

– Move the selector lever into »P«.

– Remove the air filter housing.

- Vehicles with a gasoline engine. Refer to ⇒ Rep. Gr. 24 ; Air Filter; Air Filter Housing, Removing and Installing .
- Vehicles with a diesel engine. Refer to ⇒ Rep. Gr. 23 ; Diesel Direct Injection System; Air Filter Housing, Removing and Installing .

– Remove the battery with the battery tray. Refer to ⇒ Rep. Gr. 27 ; Battery; Battery, Removing and Installing .

Note

- *A little bit of fluid remains inside the transmission fluid filter. This will drain out once the transmission fluid filter is removed.*
- *Lay some cloths down near the transmission fluid filter before removing it.*

Protected by copyright. Copying for private or commercial purposes, in part or in whole, is not permitted unless authorised by Volkswagen AG. Volkswagen AG does not guarantee or accept any liability with respect to the correctness of information in this document. Copyright by Volkswagen AG.

– Loosen the filter housing -arrow- approximately seven turns.

– Wait 10 seconds.

This allows the fluid to flow from the filter housing back into the transmission.

– Remove the filter housing and the transmission fluid filter.

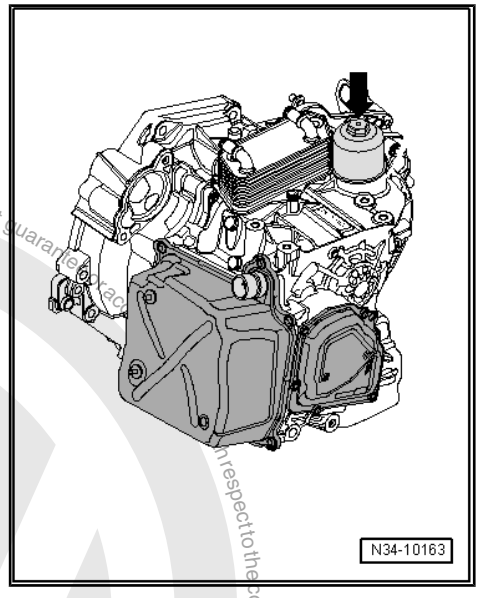

Installing

Install in reverse order of removal. Note the following:

– Thoroughly clean any lubricated areas on the transmission.

– Install the transmission fluid filter with the collar -arrow- downward.

– Install the filter housing and tighten it to 20 Nm.

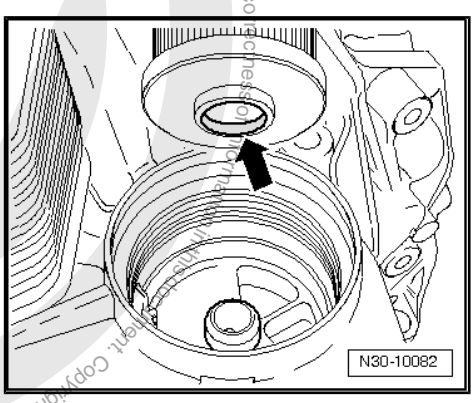

Further installation is performed in reverse order of the removal.

– Check the fluid level and fill if necessary. Refer to ⇒ “9.2 Fluid Level, Checking and Filling”, page 133 .

9.2 Fluid Level, Checking and Filling

Note the following information:

- Use the DSG® transmission fluid available as a replacement part. Refer to the Parts Catalog .
- It is necessary to use the Oil Filler - Adapter 6 - VAS6262/6- on some oil containers.
- It may be necessary to shorten the bleed pipe on the Oil Filler - VAS6262A- . Refer to ⇒ page 134 .

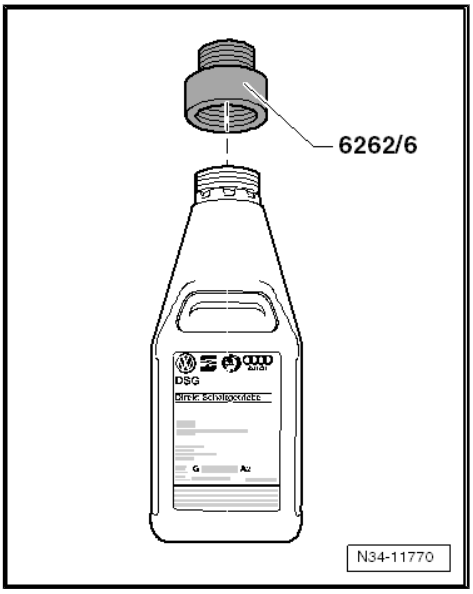

Protected by copyright. Copying for private or commercial purposes, in part or in whole, is not permitted unless authorised by Volkswagen AG. Volkswagen AG does not guarantee or accept any liability with respect to the correctness of information in this document. Copyright by Volkswagen AG.

Shorten the Bleed Pipe on the Adapter For Oil Filling - VAS6262A- as Follows:

– Shorten the bleed pipe to dimension -a-. This assures the pipe on the Adapter For Oil Filling - VAS6262A- will not touch the bottom on some oil containers.

Dimension -a- = 210 mm

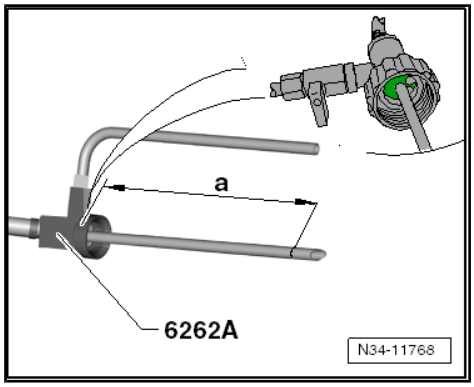

Note

Dimension -a- is measured starting from the shaft (the green surface) on the Oil Filler - VAS6262A- .

If dimension -a- is greater than 210 mm:

– Make a mark on the bleed pipe, dimension -a-, and cut it, with for example the Brake Line Tool Kit - Pipe Cutter - VAS6056/2- .

– Clean the Oil Filler - VAS6262A- .

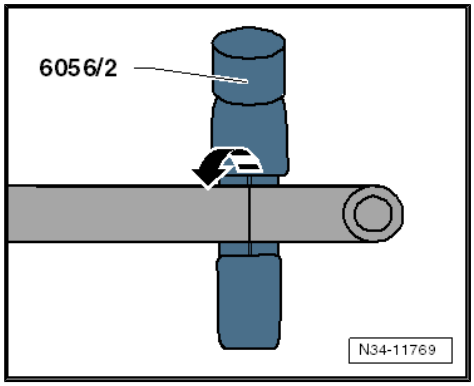

Special tools and workshop equipment required

- Vehicle Diagnostic Tester
- Used Oil Collection and Extraction Unit - SMN372500-
- Oil Filler - VAS6262A-

Requirements

- The vehicle is level and all hoist mounts are the same height.
- The noise insulation has been removed.
- The Vehicle Diagnostic Tester is connected.
- To begin working, the oil temperature should not be higher than 45 °C (113 °F).
- Test temperature: 35 ° to 45 °C (95 ° to 113 °F)

Checking

– Connect the Vehicle Diagnostic Tester and identify the vehicle in `Guided Functions`.

– Select `DSG Transmission`.

– Select `Check Fluid Level`.

Note

Let the transmission cool down if the oil temperature is higher than 45 °C (113 °F).

The engine is idling and the selector lever is in “P”.

Protected by copyright. Copying for private or commercial purposes, in part or in whole, is not permitted unless authorised by Volkswagen AG. Volkswagen AG does not guarantee or accept any liability with respect to the correctness of information in this document. Copyright by Volkswagen AG.

– Move the Used Oil Collection and Extraction Unit - SMN372500- or a Drip Tray under the transmission near the transmission drain and check plug.

– Remove the oil drain plug.

Through transmission production date "09/20/2004", transmissions were installed with two plugs.

It is important to not to interchange the bolts. Remove the bolt -A- only, near the pendulum support

Transmissions Installed after 09/20/2004, that is, that are »younger« have Only One Bolt -A-.

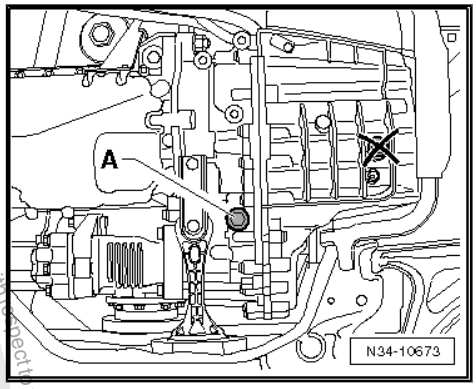

– Always replace the gasket for the drain plug -arrow-.

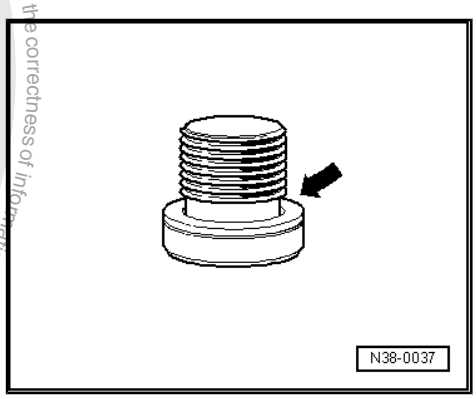

Note

Even if the level of transmission fluid is too low, first a small amount of transmission fluid will flow out of the overflow tube, because it fills during operation.

– Let the excess fluid drain.

– Install the drain plug with a new gasket as soon as all the fluid has drained out (it starts to drip).

– If no transmission fluid comes out, then fill.

Filling

Protected by copyright. Copying for private or commercial purposes, in part or in whole, is not permitted unless authorised by Volkswagen AG. Copyright by Volkswagen AG. Volkswagen AG does not guarantee or accept any liability with respect to the correctness of information in this document.

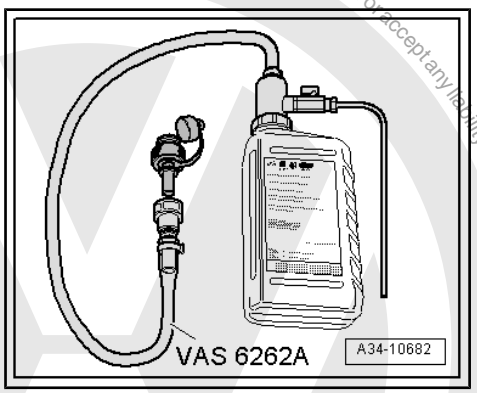

– Install the Oil Filler - VAS6262A- into the check hole hand-tight.
– Shake the bottles before opening.
– Attach the Oil Filler - VAS6262A- to the oil bottle. Be sure to read the instructions. Refer to ⇒ page 133 .
– Fill 1 liter (1.05 quarts) of transmission fluid.
– Remove the Adapter for Oil Filling - VAS6262A- at the quick-release coupling and check it.

If Fluid Flows Out of the Adapter Hole

The fluid must not be topped off.

– Let the excess fluid drain.
– As soon as the fluid has run out (it begins to drip), remove the Oil Filler - VAS6262A- and install the bolt with new gasket.

If No Fluid Flows Out of Hole

– Add another liter. Refer to ⇒ “9.2 Fluid Level, Checking and Filling”, page 133 .

> ⚠ **WARNING**
>
> ***Too little or too much fluid will impair the transmission.***

Install the oil drain plug with new gasket and tighten.

Drain Plug Tightening Specification: 45 Nm

9.3 Fluid, Draining and Filling

Use the DSG® transmission fluid available as a replacement part. Refer to the Parts Catalog .

Brief Description

Read the fluid temperature first. If it is higher than 50 °C (122 °F), then let the transmission cool down.

Turn off the engine, remove the overflow pipe and drain any fluid. Then reinstall the overflow pipe and »overfill« the transmission with fluid.

Start the engine and drain any excess fluid until the fluid level has reached the overflow tube.

Special tools and workshop equipment required

- Vehicle Diagnostic Tester
- Used Oil Collection and Extraction Unit - SMN372500-
- Oil Filler - VAS6262A-

Requirements

- The engine is off.
- The vehicle is level and all hoist mounts are the same height.
- Noise insulation is removed if necessary
- The selector lever is in “P.”
- The Vehicle Diagnostic Tester is connected.
- To begin working, the fluid temperature should not be higher than 45 °C (113 °F).

Protected by copyright. Copyright by Volkswagen AG. Volkswagen AG does not guarantee or accept any liability with respect to the correctness of information in this document. Copyright by Volkswagen AG.

Procedure

– Follow the rules for clean working conditions when working on the transmission.

– Only use the DSG® transmission fluid available as a replacement part. Other oils can cause malfunctions or transmission failure.

WARNING

Risk of injury due to hot transmission fluid.

– Connect the Vehicle Diagnostic Tester and identify the vehicle in `Guided Functions`.

– Select `DSG Transmission`.

– Select `Check Fluid Level`.

Note

Let the transmission cool down if the fluid temperature is higher than 45 °C (113 °F).

WARNING

Do not start the engine if there is no transmission fluid in the transmission.

– Engine off - do not start!

– Remove the drain plug near the pendulum support -arrow-.

A »black overflow pipe« made out of plastic is located in this hole (with 8 mm inner hex socket). Its length determines the fluid level in the transmission.

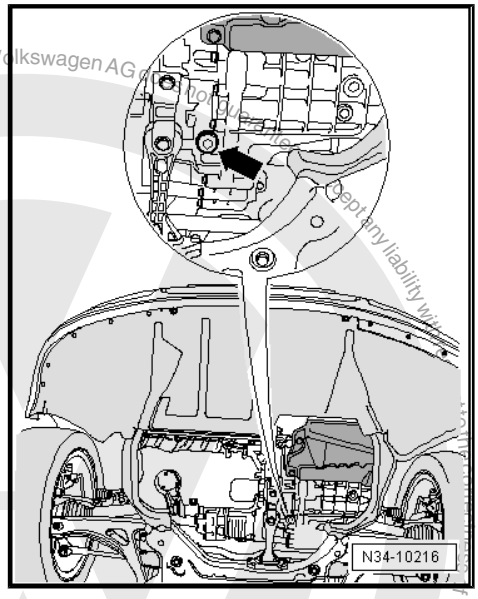

Copyright by Volkswagen AG. Volkswagen AG does not accept any liability with respect to the information in this document. Copying for private or commercial purposes, in part or in whole, is not permitted unless authorised by Volkswagen AG. Volkswagen AG does not guarantee or accept any liability with respect to the information in this document. Copyright by Volkswagen AG.

– Remove the overflow pipe -arrow- and let the fluid drain.

About 5 liters (5.28 qts) of oil will drain.

– Install the overflow pipe and tighten it to 3 Nm.

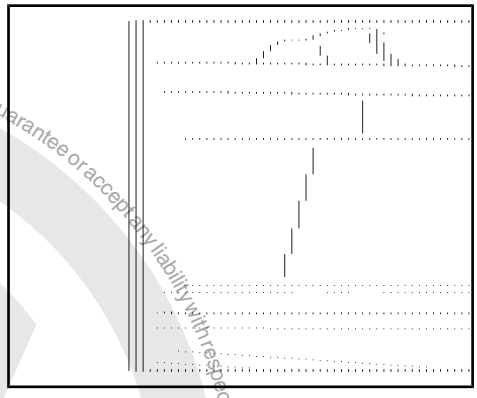

– Install the Oil Filler - VAS6262A- into the check hole hand-tight.

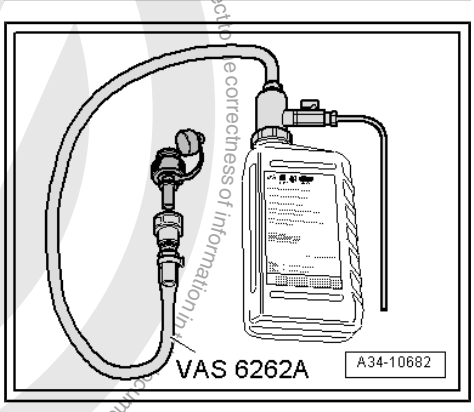

– Shake the bottles before opening.

– Attach the Oil Filler - VAS6262A- to the oil bottle. Be sure to read the instructions. Refer to ⇒ page 133 .

– Fill 5.5 liters (5.8 qts) oil.

– To change containers, close the shut-off valve or hold the Oil Filler - VAS6262A- higher than the transmission.

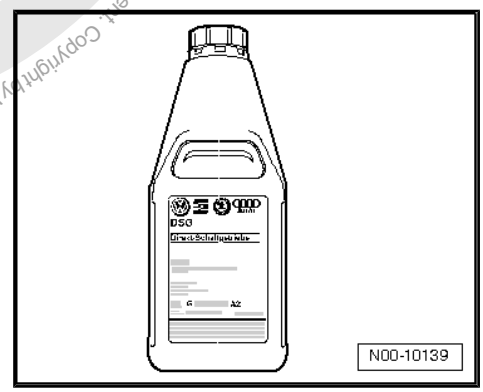

– Tighten the drain plug -A- only hand-tight.

– Start the engine.

– Press the brake pedal and select each selector lever position for approximately three seconds, then move the selector lever back into »P«.

– Do not turn off the engine.

– Then check the fluid level and fill if necessary. Refer to ⇒ “9.2 Fluid Level, Checking and Filling”, page 133 .

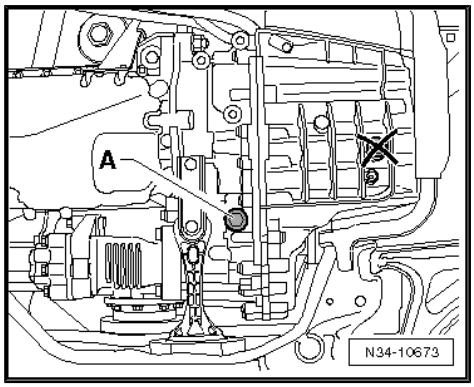

Protected by Copyright. Copying for private or commercial purposes, in part or in whole, is not permitted unless authorised by Volkswagen AG. Volkswagen AG does not guarantee or accept any liability with respect to the correctness of information in this document. Copyright by Volkswagen AG.

10 Special Tools

Special tools and workshop equipment required

- Transmission Support - 3282-
- Transmission Support - Mounting Plate 42A - 3282/42A-
- Transmission Support - Pins 29 - 3282/29-
- Torque Wrench 1331 5-50Nm - VAG1331-
- Torque Wrench 1332 40-200Nm - VAG1332-
- Engine and Gearbox Jack - VAS6931-

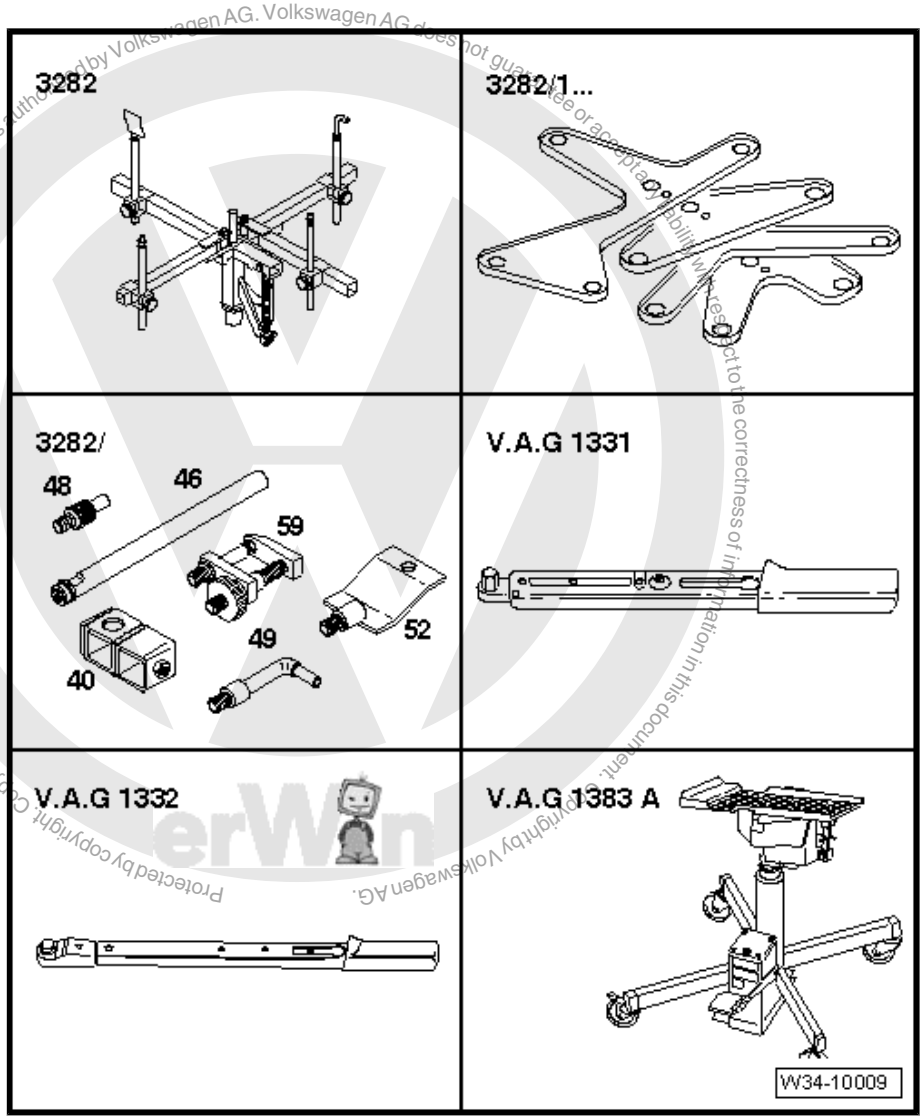

Protected by copyright. Copying for private or commercial purposes, in part or in whole, is not permitted unless authorised by Volkswagen AG. Volkswagen AG does not guarantee or accept any liability with respect to the correctness of information in this document. Copyright by Volkswagen AG.

- Engine Support Bridge - 10-222A-
- Hose Clamps - Up To 25mm - 3094- or Hose Clamps - Up To 40mm - 3093-
- Tensioning Strap - T10038-
- Engine Support - Basic Set - T40091-
- Engine Support - Supplement Kit - T40093A-
- Engine Bung Set - VAS6122-

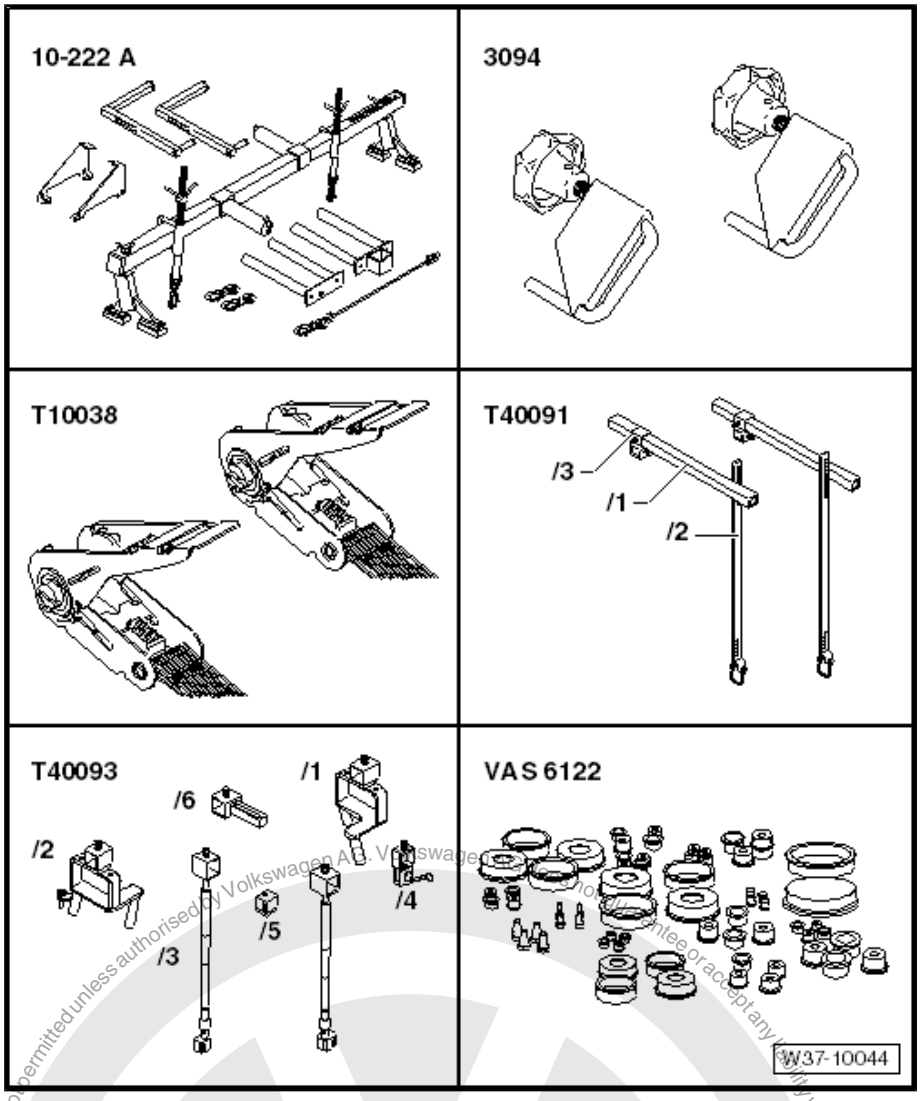

Protected by copyright. Copying for private or commercial purposes, in part or in whole, is not permitted unless authorised by Volkswagen AG. Volkswagen AG does not guarantee or accept any liability with respect to the correctness of information in this document. Copyright by Volkswagen AG.

- Engine Support Bridge - 10-222A-
- Transmission Support - Mounting Plate 42A - 3282/42A-
- Engine Support Bridge - Engine Support Feet - 10-222A/8-
- Engine Support Bridge - Engine Support 3 - 10-222A/3-
- Transmission Support - 3282-
- Insert Tool - 18mm - T10179-

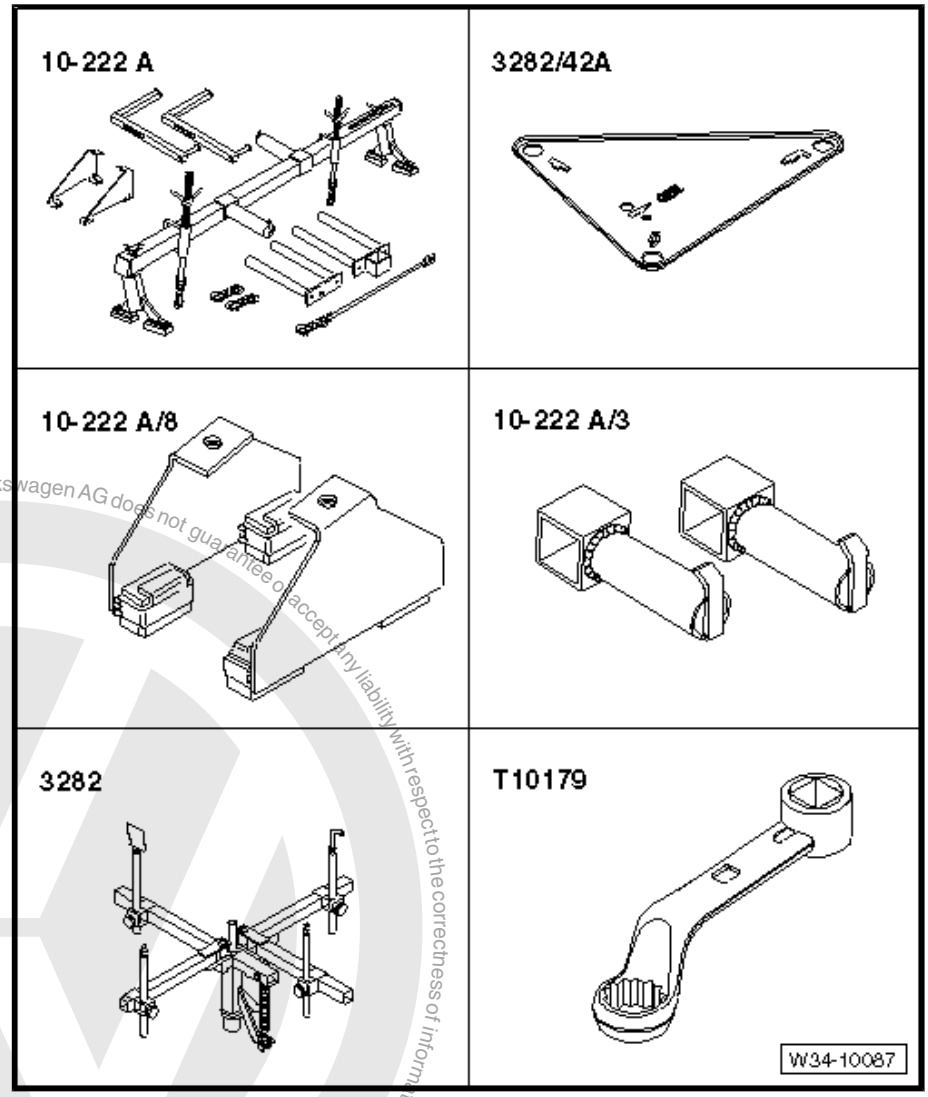

- Used Oil Collection and Extraction Unit - SMN372500-

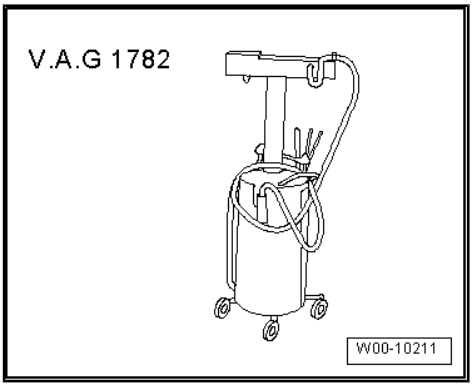

Protected by copyright. Copying for private or commercial purposes, in part or in whole, is not permitted unless authorised by Volkswagen AG. Volkswagen AG does not guarantee or accept any liability with respect to the correctness of information in this document. Copyright by Volkswagen AG.

- Wrench - Pump/Injector Long Reach - T10054- .

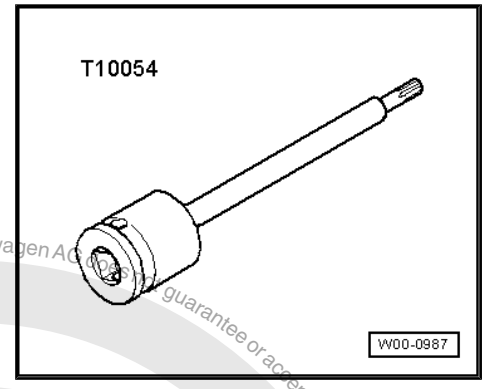

- Engine Support Bridge - Gearbox Bracket - T10346-

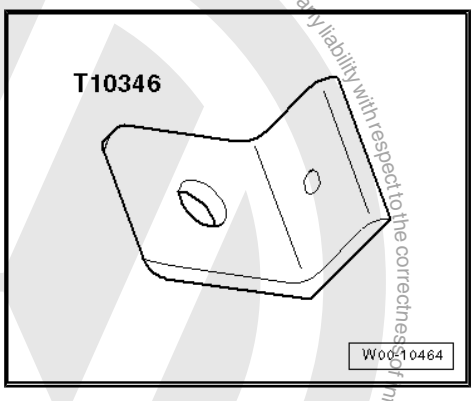

- Puller - Crankshaft/Power Steering Seal - T20143-

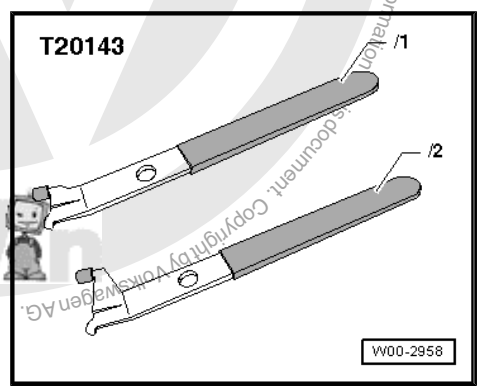

- Oil Filler - VAS6262A-

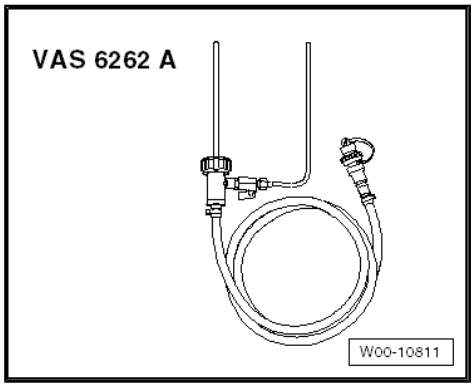

Protected by copyright. Copying for private or commercial purposes, in part or in whole, is not permitted unless authorised by Volkswagen AG. Volkswagen AG does not guarantee or accept any liability with respect to the correctness of information in this document. Copyright by Volkswagen AG.

- Press Piece - Shift Rod/Alternator - VW423-

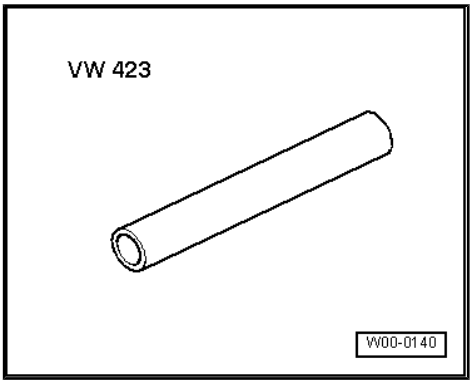

- Transmission Support - Pins 29 - 3282/29-

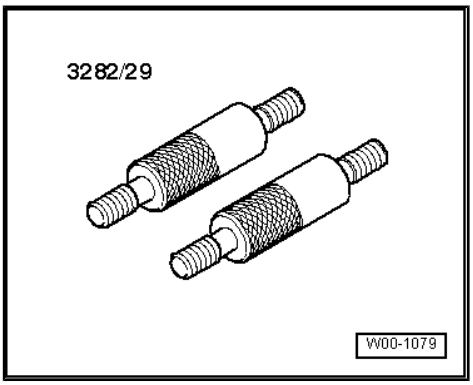

- Vehicle Diagnostic Tester

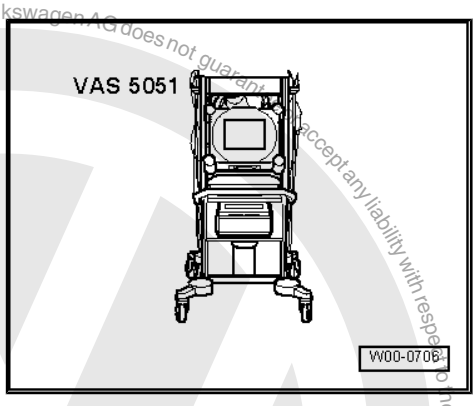

Protected by copyright. Copying for private or commercial purposes, in part or in whole, is not permitted unless authorised by Volkswagen AG. Volkswagen AG does not guarantee or accept any liability with respect to the correctness of information in this document. Copyright by Volkswagen AG.

35 – Gears, Shafts

1 No Repairs to Gears and Shafts

Protected by copyright. Copying for private or commercial purposes, in part or in whole, is not permitted unless authorised by Volkswagen AG. Volkswagen AG does not guarantee or accept any liability with respect to the correctness of information in this document. Copyright by Volkswagen AG.

39 – Final Drive, Differential

1 Flange Shaft or Stub Shaft Seals, Replacing

⇒ "1.1 Component Location Overview - Seals", page 145

⇒ "1.2 Left Flange Shaft Seal, Replacing", page 146

⇒ "1.3 Right Flange Shaft or Stub Shaft Seal, Replacing", page 148

Do not remove both bolts in the right and left flange shafts or the right stub shaft at the same time. If the differential bevel gears rotate, it will be difficult to install the bolts.

1.1 Component Location Overview - Seals

Note

Do not remove all the bolts in the left and right flange shafts at the same time. If the differential bevel gears inside the differential rotate, it will be difficult to install the bolts.

1 - Right Flange Shaft or Stub Shaft Seal

- ❑ Replacing. Refer to ⇒ "1.3 Right Flange Shaft or Stub Shaft Seal, Replacing", page 148 .

2 - Right Flange Shaft

- ❑ Removing and installing. Refer to ⇒ "1.3 Right Flange Shaft or Stub Shaft Seal, Replacing", page 148 .

3 - Bolt

- ❑ 30 Nm
- ❑ Replace after removing

4 - Nut

- ❑ 20 Nm
- ❑ Replace after removing

5 - Selector Lever

6 - Selector Shaft Seal

- ❑ Replacing. Refer to ⇒ "4 Selector Shaft Lever Gasket, Replacing", page 60 .

7 - Left Flange Shaft Seal

- ❑ Replacing. Refer to ⇒ "1.2 Left Flange Shaft Seal, Replacing", page 146 .

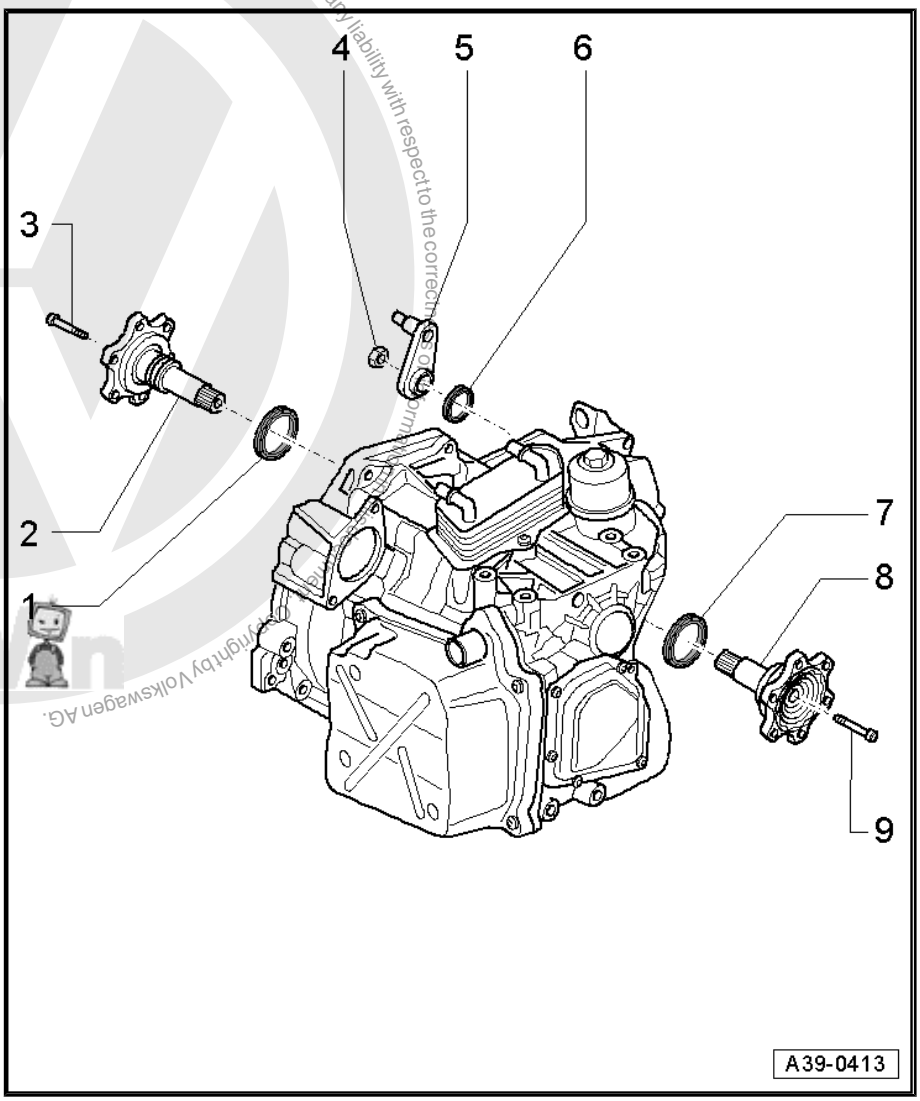

Protected by copyright. Copying for private or commercial purposes, in part or in whole, is not permitted unless authorized by Volkswagen AG. Volkswagen AG does not guarantee or accept any liability with respect to the correctness of information.
Copyright by Volkswagen AG.

8 - Left Flange Shaft

- ❑ Removing and installing. Refer to ⇒ “1.2 Left Flange Shaft Seal, Replacing”, page 146 .

9 - Bolt

- ❑ 30 Nm
- ❑ Replace after removing

1.2 Left Flange Shaft Seal, Replacing

Special tools and workshop equipment required

- ♦ Slide Hammer Set - VW771-
- ♦ Slide Hammer Set - Hook - VW771/37-
- ♦ Seal Installer - Flange Shaft - 3305-
- ♦ Torque Wrench 1331 5-50Nm - VAG1331-
- ♦ Torque Wrench 1332 40-200Nm - VAG1332-
- ♦ Sealing Grease - G 052 128 A1-
- ♦ Shop Crane - Drip Tray - VAS6208-
- ♦ Sealing Grease - G 052 128 A1-

Removing

– Press the brake and remove the bolt from the left drive axle -arrow- (second technician).

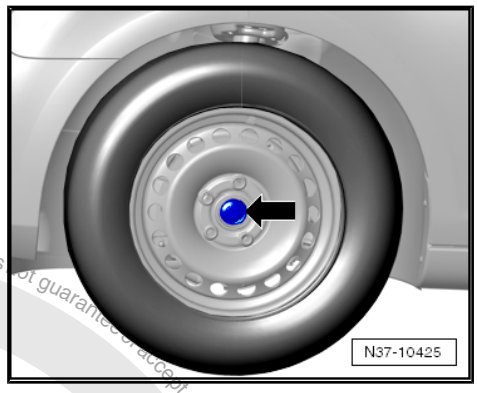

Note

After this, the vehicle must not stand on the ground. Refer to ⇒ Suspension, Wheels, Steering; Rep. Gr. 40 ; Drive Axles, Removing and Installing .

– Remove the left front wheel.

– Remove the noise insulation. Refer to ⇒ Body Exterior; Rep. Gr. 50 ; Noise Insulation .

– Remove the lower section of the left front wheel housing liner. Refer to ⇒ Body Exterior; Rep. Gr. 66 ; Wheel Housing Liner; Overview - Front Wheel Housing Liner .

– Remove the left drive axle. Refer to ⇒ Suspension, Wheels, Steering; Rep. Gr. 40 ; Drive Axles, Removing and Installing .

– Place the Shop Crane - Drip Tray - VAS6208- or Used Oil Collection and Extraction Unit - SMN372500- under the transmission.

Protected by copyright. Copying for private or commercial purposes, in part or in whole, is not permitted unless authorised by Volkswagen AG. Volkswagen AG does not guarantee or accept any liability with respect to the correctness of information in this document. Copyright by Volkswagen AG.

– Remove the flange shaft bolt, by installing two bolts into the flange and counterholding the flange shaft using a tire iron.
– Remove the flange shaft together with the pressure spring.

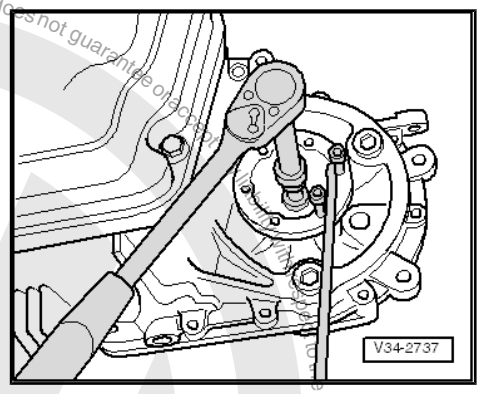

– Remove the flange seal using the Slide Hammer Set - VW771- and Slide Hammer Set - Hook - VW771/37- .

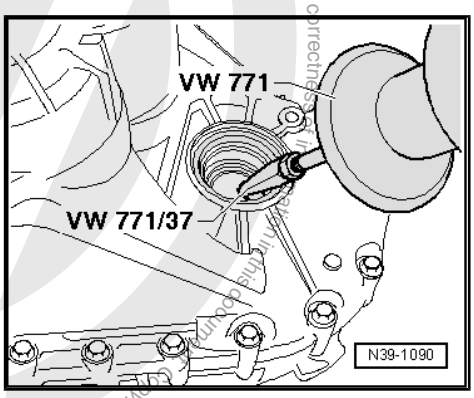

Installing

– Lightly oil the new gasket on the outer edge.

– Fill the space on the new seal between the sealing and dust lip halfway with Sealing Grease - G 052 128- -arrow-.

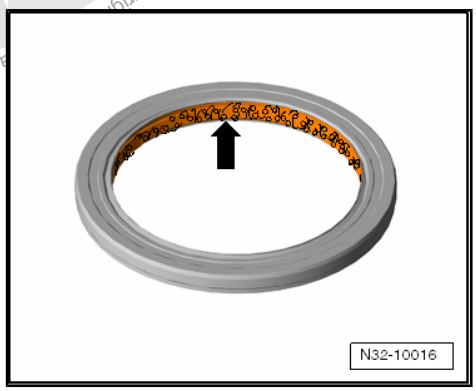

Volkswagen AG. Volkswagen AG does not guarantee or accept any liability with respect to the correctness of information in this document. Copyright by Volkswagen AG. Protected by copyright. Copying for private or commercial purposes, in part or in whole, is not permitted unless authorized by Volkswagen AG.

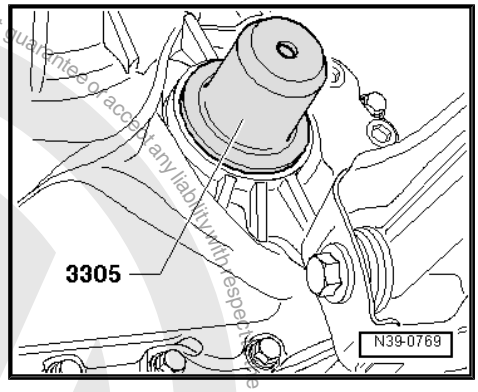

– Install the seal all the way in without tilting it.

– Install the flange shaft.

– Tighten the new flange shaft bolt to the tightening specification. Push the flange shaft against the transmission so that the bolt engages in the thread.

– Install the left drive axle. Refer to ⇒ Suspension, Wheels, Steering; Rep. Gr. 40 ; Drive Axles, Removing and Installing .

– Install the left front housing liner. Refer to ⇒ Body Exterior; Rep. Gr. 66 ; Wheel Housing Liner; Front Wheel Housing Liner, Removing and Installing .

– Install the left wheel. Refer to ⇒ Suspension, Wheels, Steering; Rep. Gr. 44 ; Wheel Installation Tightening Specifications .

– Check the fluid level and fill if necessary. Refer to ⇒ “9.2 Fluid Level, Checking and Filling”, page 133 .

– Install the noise insulation. Refer to ⇒ Body Exterior; Rep. Gr. 50 ; Noise Insulation .

Tightening Specifications

♦ Refer to ⇒ “1.1 Component Location Overview - Seals”, page 145 .

1.3 Right Flange Shaft or Stub Shaft Seal, Replacing

Special tools and workshop equipment required

♦ Seal Installer - Axle Flange - 3158-

♦ Torque Wrench 1331 5-50Nm - VAG1331-

♦ Torque Wrench 1332 40-200Nm - VAG1332-

♦ Shop Crane - Drip Tray - VAS6208-

♦ Sealing Grease - G 052 128 A1-

Removing

– Remove the right wheel.

– Remove the noise insulation. Refer to ⇒ Body Exterior; Rep. Gr. 50 ; Noise Insulation .

– If equipped, remove the drive axle heat shield from the engine -arrows-.

– Remove the right drive axle. Refer to ⇒ Suspension, Wheels, Steering; Rep. Gr. 40 ; Drive Axles, Removing and Installing .

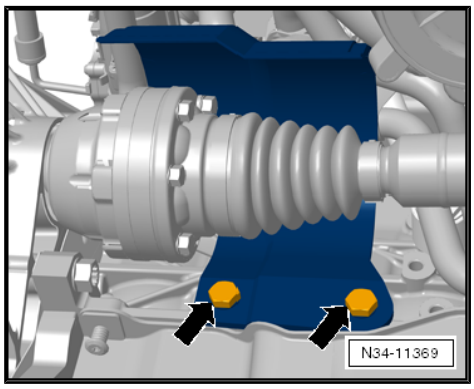

Vehicles with an Intermediate Shaft

Copyright by Volkswagen AG. Volkswagen AG does not guarantee or accept any liability with respect to the correctness of information in this document. Copyright by Volkswagen AG. Distributed by copyright. Copying for private or commercial purposes, in part or in whole, is not permitted unless authorised by Volkswagen AG.

– After removing the right drive axle -A-, remove the intermediate shaft -B- from the mounting bracket -C- -arrows- and from the transmission stub shaft.

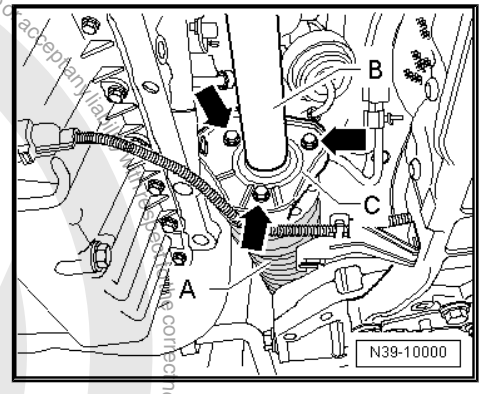

Continuation for All Vehicles

– Place the Shop Crane - Drip Tray - VAS6208- or Used Oil Collection and Extraction Unit - SMN372500- under the transmission.

– Remove the stub shaft bolt -arrow- or the flange shaft.

– Remove the stub shaft or flange shaft together with the pressure spring.

– Pry out the gasket.

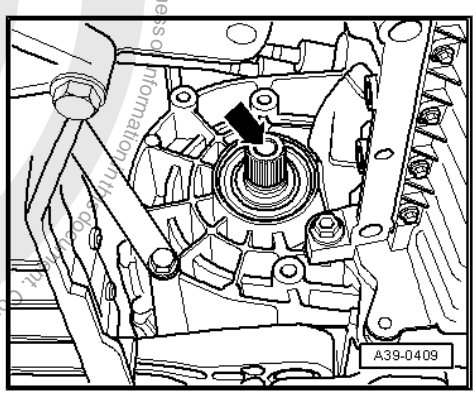

Installing

– Lightly oil the new gasket on the outer edge.

– Fill the space on the new seal between the sealing and dust lip halfway with Sealing Grease - G 052 128- -arrow-.

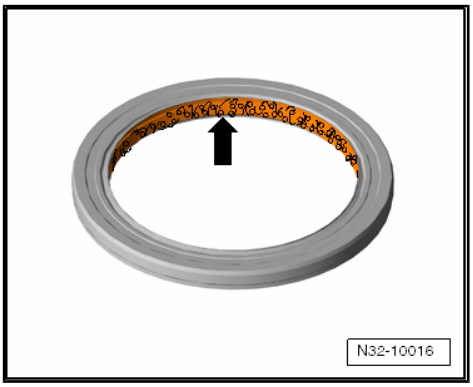

– Install the seal all the way in without tilting it.

– Install the stub shaft or flange shaft.

– Tighten the new flange shaft bolt to the tightening specification. Push the stub shaft or flange shaft against the transmission so that the bolt engages in the thread.

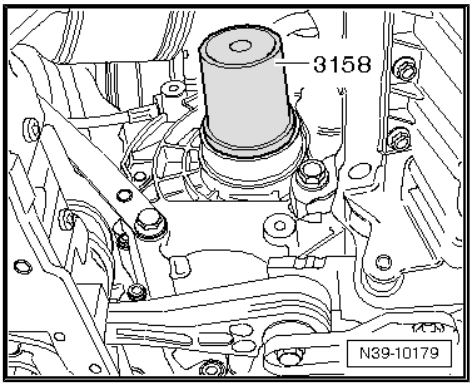

Vehicles with an Intermediate Shaft

– Replace the O-ring on the stub shaft.

– Grease the splines on the stub shaft.

Note

Refer to the Parts Catalog for the grease allocation.

Protected by copyright. Copying for private or commercial purposes, in part or in whole, is not permitted unless authorised by Volkswagen AG. Volkswagen AG does not guarantee or accept any liability with respect to the correctness of information in this document. Copyright by Volkswagen AG.

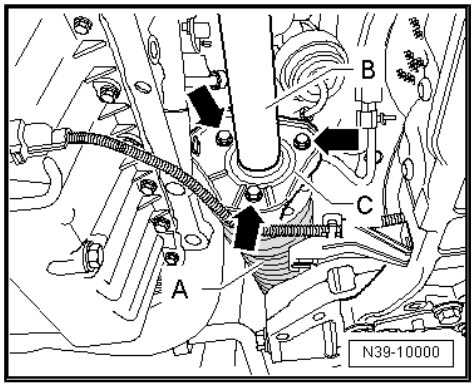

– Guide the intermediate shaft -B- through the mounting bracket -C- and onto the stub shaft.

– Tighten the intermediate shaft on the mounting bracket to the specification -arrows-. Refer to ⇒ Suspension, Wheels, Steering; Rep. Gr. 40 ; Drive Axles, Removing and Installing .

Continuation for All Vehicles

– Install the right drive axle. Refer to ⇒ Suspension, Wheels, Steering; Rep. Gr. 40 ; Drive Axles, Removing and Installing .

– Install the right wheel. Refer to ⇒ Suspension, Wheels, Steering; Rep. Gr. 44 ; Wheel Installation Tightening Specifications .

– Check the fluid level and fill if necessary. Refer to ⇒ “9.2 Fluid Level, Checking and Filling”, page 133 .

– Install the noise insulation. Refer to ⇒ Body Exterior; Rep. Gr. 50 ; Noise Insulation .

Tightening Specifications

♦ Refer to ⇒ “1.1 Component Location Overview - Seals”, page 145 .

Protected by copyright. Copyright by Volkswagen AG. Volkswagen AG does not guarantee or accept any liability with respect to the correctness of information in this document. Copyright by Volkswagen AG.
Protected by copyright. Copying for private or commercial purposes, in part or in whole, is not permitted unless authorised by Volkswagen AG.

2 Special Tools

Special tools and workshop equipment required

- Slide Hammer Set - VW771-
- Slide Hammer Set - Hook - VW771/37-
- Seal Installer - Flange Shaft - 3305-
- Torque Wrench 1331 5-50Nm - VAG1331-
- Torque Wrench 1332 40-200Nm - VAG1332-

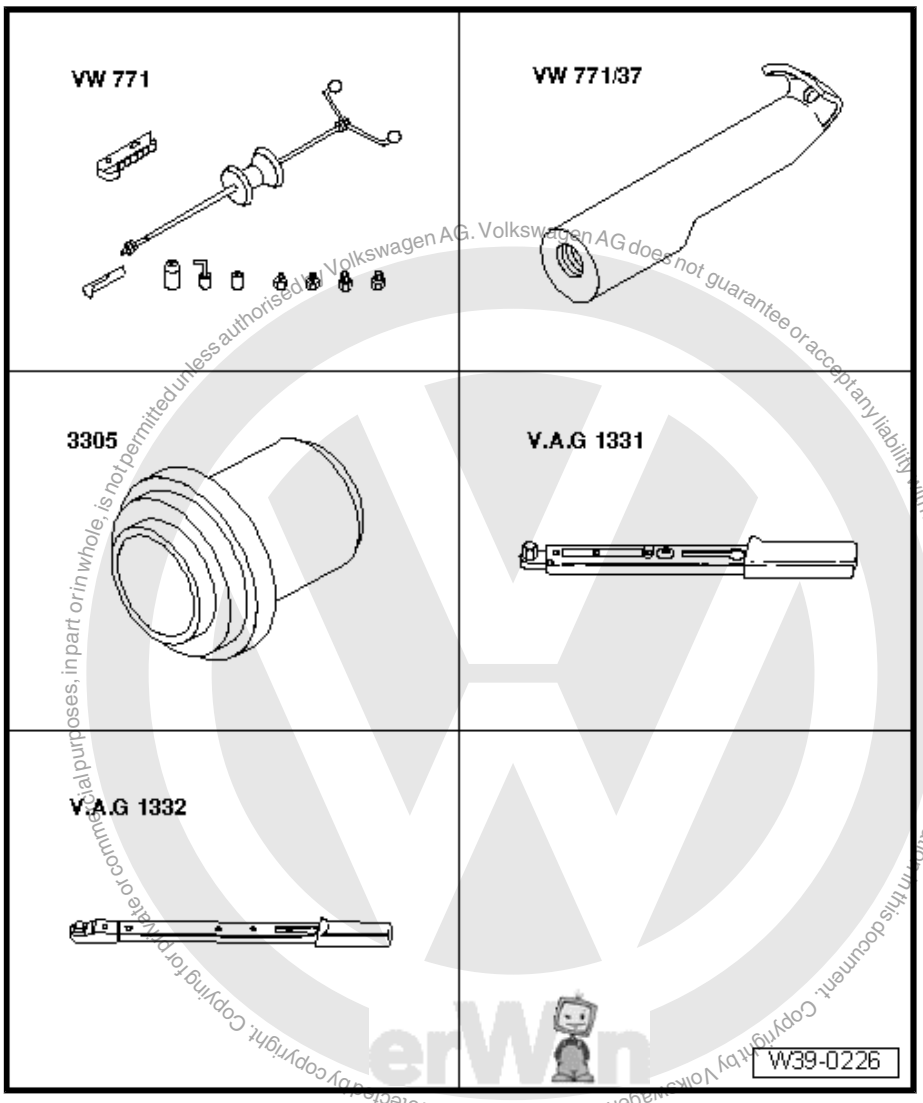

- Shop Crane - Drip Tray - VAS6208-

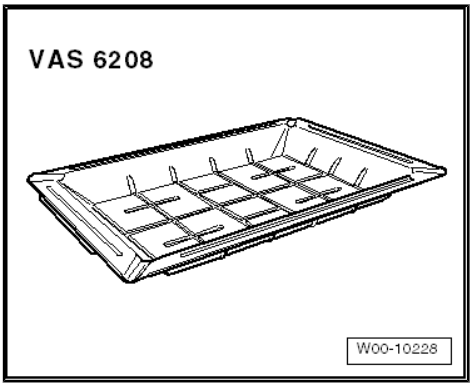

Protected by copyright. Copying for private or commercial purposes, in part or in whole, is not permitted unless authorised by Volkswagen AG. Volkswagen AG does not guarantee or accept any liability with respect to the correctness of information in this document. Copyright by Volkswagen AG.

Protected by copyright. Copying for private or commercial purposes, in part or in whole, is not permitted unless authorised by Volkswagen AG. Volkswagen AG does not guarantee or accept any liability with respect to the correctness of information in this document. Copyright by Volkswagen AG.

- Seal Installer - Axle Flange - 3158-

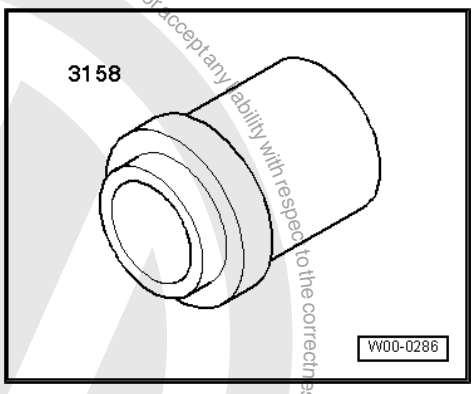

3 Revision History

DRUCK NUMBER: MEX5R006621

Factory Edition	Edit Edition	Job Type	Feedback	Notes	Quality Checked By
09.2015	10/12/2015	Factory Update	N/A		Eric P.
05.2013	6/17/2015	Reformat	N/A		Jim H
	07/22/2014	Local Feedback	1028584		Eric P
	1/13/2014	Local Feedback	988140	Fix Metta Data for Transmission Removing. GWR	Gary R
	08/27/2013	Local Feedback	959001	Fixed Metta Data to add CPLA and CPPA engines. FB 951624 added text for the setting the DSG Transmission Mechatronic J743 with Vehicle Diagnostic Tester. GWR	Gary R

Protected by copyright. Copying for private or commercial purposes, in part or in whole, is not permitted unless authorised by Volkswagen AG. Volkswagen AG does not guarantee or accept any liability with respect to the correctness of information in this document. Copyright by Volkswagen AG.

Cautions & Warnings

Please read these WARNINGS and CAUTIONS before proceeding with maintenance and repair work. You must answer that you have read and you understand these WARNINGS and CAUTIONS before you will be allowed to view this information.

- If you lack the skills, tools and equipment, or a suitable workshop for any procedure described in this manual, we suggest you leave such repairs to an authorized Volkswagen retailer or other qualified shop. We especially urge you to consult an authorized Volkswagen retailer before beginning repairs on any vehicle that may still be covered wholly or in part by any of the extensive warranties issued by Volkswagen.

- Disconnect the battery negative terminal (ground strap) whenever you work on the fuel system or the electrical system. Do not smoke or work near heaters or other fire hazards. Keep an approved fire extinguisher handy.

- Volkswagen is constantly improving its vehicles and sometimes these changes, both in parts and specifications, are made applicable to earlier models. Therefore, part numbers listed in this manual are for reference only. Always check with your authorized Volkswagen retailer parts department for the latest information.

- Any time the battery has been disconnected on an automatic transmission vehicle, it will be necessary to reestablish Transmission Control Module (TCM) basic settings using the VAG 1551 Scan Tool (ST).

- Never work under a lifted vehicle unless it is solidly supported on stands designed for the purpose. Do not support a vehicle on cinder blocks, hollow tiles or other props that may crumble under continuous load. Never work under a vehicle that is supported solely by a jack. Never work under the vehicle while the engine is running.

- For vehicles equipped with an anti-theft radio, be sure of the correct radio activation code before disconnecting the battery or removing the radio. If the wrong code is entered when the power is restored, the radio may lock up and become inoperable, even if the correct code is used in a later attempt.

- If you are going to work under a vehicle on the ground, make sure that the ground is level. Block the wheels to keep the vehicle from rolling. Disconnect the battery negative terminal (ground strap) to prevent others from starting the vehicle while you are under it.

- Do not attempt to work on your vehicle if you do not feel well. You increase the danger of injury to yourself and others if you are tired, upset or have taken medicine or any other substances that may impair you or keep you from being fully alert.

- Never run the engine unless the work area is well ventilated. Carbon monoxide (CO) kills.

- Always observe good workshop practices. Wear goggles when you operate machine tools or work with acid. Wear goggles, gloves and other protective clothing whenever the job requires working with harmful substances.

- Tie long hair behind your head. Do not wear a necktie, a scarf, loose clothing, or a necklace when you work near machine tools or running engines. If your hair, clothing, or jewelry were to get caught in the machinery, severe injury could result.

- Do not re-use any fasteners that are worn or deformed in normal use. Some fasteners are designed to be used only once and are unreliable and may fail if used a second time. This includes, but is not limited to, nuts, bolts, washers, circlips and cotter pins. Always follow the recommendations in this manual - replace these fasteners with new parts where indicated, and any other time it is deemed necessary by inspection.

next

© 2002 Volkswagen of America, Inc.
All rights reserved. Information contained in this document is based on the latest information available at the time of printing and is subject to the copyright and other intellectual property rights of Volkswagen of America, Inc., its affiliated companies and its licensors. All rights are reserved to make changes at any time without notice. No part of this document may be reproduced, stored in a retrieval system, or transmitted in any form or by any means, electronic, mechanical, photocopying, recording, or otherwise, nor may these materials be modified or reposted to other sites, without the prior expressed written permission of the publisher.
Version 1.0

Cautions & Warnings

- Illuminate the work area adequately but safely. Use a portable safety light for working inside or under the vehicle. Make sure the bulb is enclosed by a wire cage. The hot filament of an accidentally broken bulb can ignite spilled fuel or oil.

- Friction materials such as brake pads and clutch discs may contain asbestos fibers. Do not create dust by grinding, sanding, or by cleaning with compressed air. Avoid breathing asbestos fibers and asbestos dust. Breathing asbestos can cause serious diseases such as asbestosis or cancer, and may result in death.

- Finger rings should be removed so that they cannot cause electrical shorts, get caught in running machinery, or be crushed by heavy parts.

- Before starting a job, make certain that you have all the necessary tools and parts on hand. Read all the instructions thoroughly; do not attempt shortcuts. Use tools that are appropriate to the work and use only replacement parts meeting Volkswagen specifications. Makeshift tools, parts and procedures will not make good repairs.

- Catch draining fuel, oil or brake fluid in suitable containers. Do not use empty food or beverage containers that might mislead someone into drinking from them. Store flammable fluids away from fire hazards. Wipe up spills at once, but do not store the oily rags, which can ignite and burn spontaneously.

- Use pneumatic and electric tools only to loosen threaded parts and fasteners. Never use these tools to tighten fasteners, especially on light alloy parts. Always use a torque wrench to tighten fasteners to the tightening torque listed.

- Keep sparks, lighted matches, and open flame away from the top of the battery. If escaping hydrogen gas is ignited, it will ignite gas trapped in the cells and cause the battery to explode.

- Be mindful of the environment and ecology. Before you drain the crankcase, find out the proper way to dispose of the oil. Do not pour oil onto the ground, down a drain, or into a stream, pond, or lake. Consult local ordinances that govern the disposal of wastes.

- The air-conditioning (A/C) system is filled with a chemical refrigerant that is hazardous. The A/C system should be serviced only by trained automotive service technicians using approved refrigerant recovery/recycling equipment, trained in related safety precautions, and familiar with regulations governing the discharging and disposal of automotive chemical refrigerants.

- Before doing any electrical welding on vehicles equipped with anti-lock brakes (ABS), disconnect the battery negative terminal (ground strap) and the ABS control module connector.

- Do not expose any part of the A/C system to high temperatures such as open flame. Excessive heat will increase system pressure and may cause the system to burst.

- When boost-charging the battery, first remove the fuses for the Engine Control Module (ECM), the Transmission Control Module (TCM), the ABS control module, and the trip computer. In cases where one or more of these components is not separately fused, disconnect the control module connector(s).

- Some of the vehicles covered by this manual are equipped with a supplemental restraint system (SRS), that automatically deploys an airbag in the event of a frontal impact. The airbag is operated by an explosive device. Handled improperly or without adequate safeguards, it can be accidentally activated and cause serious personal injury. To guard against personal injury or airbag system failure, only trained Volkswagen Service technicians should test, disassemble or service the airbag system.

© 2002 Volkswagen of America, Inc.
All rights reserved. Information contained in this document is based on the latest information available at the time of printing and is subject to the copyright and other intellectual property rights of Volkswagen of America, Inc., its affiliated companies and its licensors. All rights are reserved to make changes at any time without notice. No part of this document may be reproduced, stored in a retrieval system, or transmitted in any form or by any means, electronic, mechanical, photocopying, recording, or otherwise, nor may these materials be modified or reposted to other sites, without the prior expressed written permission of the publisher.
Version 1.0

Cautions & Warnings

- Do not quick-charge the battery (for boost starting) for longer than one minute, and do not exceed 16.5 volts at the battery with the boosting cables attached. Wait at least one minute before boosting the battery a second time.

- Never use a test light to conduct electrical tests of the airbag system. The system must only be tested by trained Volkswagen Service technicians using the VAG 1551 Scan Tool (ST) or an approved equivalent. The airbag unit must never be electrically tested while it is not installed in the vehicle.

- Some aerosol tire inflators are highly flammable. Be extremely cautious when repairing a tire that may have been inflated using an aerosol tire inflator. Keep sparks, open flame or other sources of ignition away from the tire repair area. Inflate and deflate the tire at least four times before breaking the bead from the rim. Completely remove the tire from the rim before attempting any repair.

- When driving or riding in an airbag-equipped vehicle, never hold test equipment in your hands or lap while the vehicle is in motion. Objects between you and the airbag can increase the risk of injury in an accident.

I have read and I understand these Cautions and Warnings.

back OK

Protected by copyright. Copying for private or commercial purposes, in part or in whole, is not permitted unless authorised by Volkswagen AG. Volkswagen AG does not guarantee or accept any liability with respect to the correctness of information in this document. Copyright by Volkswagen AG.

© 2002 Volkswagen of America, Inc.
All rights reserved. Information contained in this document is based on the latest information available at the time of printing and is subject to the copyright and other intellectual property rights of Volkswagen of America, Inc., its affiliated companies and its licensors. All rights are reserved to make changes at any time without notice. No part of this document may be reproduced, stored in a retrieval system, or transmitted in any form or by any means, electronic, mechanical, photocopying, recording, or otherwise, nor may these materials be modified or reposted to other sites, without the prior expressed written permission of the publisher.
Version 1.0